Institut für Geophysik, Astrophysik und Meteorologie
Karl - Franzens - Universität Graz
Universitätsplatz 5, A-8010 Graz, Austria
http://www.uni-graz.at/igam

Wissenschaftlicher Bericht No. 14

ACE+ — Atmosphere and Climate Explorer Based on GPS, GALILEO, and LEO-LEO Radio Occultation

by
Per Hoeg and Gottfried Kirchengast

January 2002

Institute for Geophysics, Astrophysics, and Meteorology

ACE+

Atmosphere and Climate Explorer

Based on GPS, GALILEO, and LEO-LEO Radio Occultation

Proposal to ESA in Response to the
Second Call for Proposals for Earth Explorer Opportunity Missions

by

Dr. Per Høeg
Atmosphere Ionosphere Research Division
Danish Meteorological Institute
Lyngbyvej 100, DK-2100, Copenhagen
Denmark

Telephone: +45 39 157 486
Fax: +45 39 157 460
E-mail: hoeg@dmi.dk

and

Prof. Gottfried Kirchengast
Institute for Geophysics, Astrophysics, and Meteorology
University of Graz
Universitaetsplatz 5, A-8010 Graz
Austria

Telephone: +43 316 380 5260
Fax: +43 316 380 9825
E-mail: gottfried.kirchengast@uni-graz.at

January 2002

Executive Summary

The ACE+ mission will contribute in a significant manner to Science Theme 2 – *Physical Climate* – and Science Theme 4 – *Atmosphere and Marine Environment* – of the ESA Living Planet Programme.

ACE+ will considerably advance our knowledge about atmosphere physics and climate change processes. The mission will demonstrate a highly innovative approach using radio occultations for globally measuring profiles of humidity and temperature throughout the troposphere and stratosphere. The mission will provide data of remarkably high accuracy, density and resolution, leading to new methods for testing and improving global climate models and predictions within the planned mission lifetime of 5 years.

A constellation of 4 small satellites, tracking L-band GPS/GALILEO signals and X/K-band LEO-LEO cross-link signals, will map the detailed refractivity profile and structure of the global atmosphere from the Earth's surface to the top of the stratosphere. Detecting predicted climate change trends of the troposphere within a decade requires refractivity accuracies corresponding to around a tenth of a Kelvin. We propose to test the predictive capability of global climate models by using atmospheric profiling occultation observations from the ACE+ constellation of satellites to search for and quantify forced climate signals, predicted by existing climate models. An important asset of utilising the radio occultation technique is its "all-weather" capability due to the long wavelengths involved (centimetre and decimetre waves). Furthermore, the measurements feature exceptional long-term stability due to their self-calibrating nature, a feature that is of key importance for climate change monitoring.

The ACE+ mission is very timely. It complies with the objectives and requirements for a wide range of international programmes and conventions, including: UN Kyoto Protocol, IPCC, WCRP CLIVAR and GEWEX programme, WMO GCOS (Global Climate Observing System), WMO satellite requirements, SPARC recommendations, EU GMES Programme, and several EU COST Actions.

The proposed mission will be highly complementary to other ESA missions and to other planned European observation systems with participation from EUMETSAT and EU. Moreover, it will place Europe in a leading role internationally, since other planned occultation-based observation systems will only provide additional temperature coverage if they eventually get approved. The LEO-LEO part would be a genuinely novel demonstration.

Finally, the ACE+ mission is based on comprehensive scientific and technical ESA studies since 1995, especially on the ACE (Atmosphere Climate Experiment) and related small satellite constellation missions, supplemented with results from recent ESA studies including on the proposed WATS Earth Explorer Core Mission. The ACE+ implementation is based on a strong heritage from previous satellite designs and foresees extensive use of commercial components. A European scientific core team of more than 10 institutions and a worldwide science user team of a dozen institutions support the proposal and are keen to realize its promise. Furthermore, an industrial consortium composed of leading companies from a range of ESA's smaller and larger member states and with substantial experience and success in implementing small satellite missions has been instrumental in preparing the proposal. Hence the overall risk of the project is considered to be low.

A concise summary of the scientific background, research objectives, observational requirements, mission elements, and system concept is given in the following summary sheet.

ACE+ — Atmosphere and Climate Explorer

Based on GPS, GALILEO, and LEO-LEO Radio Occultation

Scientific Background

Accurate observations of humidity and temperature in the troposphere and stratosphere - including their variability - are highly important in climate change research (IPCC, 2001). ACE+ serves this need with its mission goals:

- To **monitor** climatic variations and trends at different vertical levels and for each season. This to improve our understanding of the climate system as well as to detect the different fingerprints of global warming;
- To **improve the understanding** of climatic feedbacks defining the magnitude of climate changes in response to given forcings;
- To **validate** the simulated mean climate and its variability in global climate models;
- To **improve** and tune - via data assimilation - the **parameterisation** of unresolved processes in climate models and to detect interannual variations in external forcing of climate.

Research Objectives

Main objectives:

- to establish a **highly accurate** and **vertically resolved climatology of humidity** in the troposphere with global all-weather measurements of its concentration,
- to establish a **highly accurate** and **vertically resolved climatology of temperature** in the troposphere and stratosphere with global all-weather measurements of its vertical structure,
- to support **research on climate** variability and climate change and on **validation and improvement of atmospheric models**,
- to support **advancements on NWP** (Numerical Weather Prediction),
- to support **analysis and validation of** data from **other space missions**,
- to **demonstrate a novel active** self-calibrating atmospheric **sounding method**.

Spin-off objectives:

- ionospheric climate & weather and space weather investigations,
- assessing and improving present water vapour attenuation models.

Mission Elements

Space segment:

Small constellation of micro-satellites each of them carrying two instruments:

- a precision L-band receiver and related antennae for GPS/GALILEO-LEO occultations,
- a precision X/K-band transmitter (on 2 sats) and receiver (on 2 counter-rotating sats) and related antennae for LEO-LEO occultations (3 frequencies).

Ground segment:

- Satellite operation and control
- Fiducial stations for Precise Orbit Determination
- Level 1b processing and archiving centre
- Science data centres for higher level product generation and for data assimilation

Data products:

Profiles of bending angle and absorption, and retrieved profiles of refractivity, humidity, temperature, and pressure as function of height. Data products will be made available to data assimilation centres in near-real time.

Observational Requirements

Horizontal coverage	global
Horizontal sampling	< 500 km (LEO-LEO per month)
Vertical domain	surface – 15 km (humidity) surface – 50 km (temperature)
Vertical sampling	0.5–1 km
Temporal sampling	< 12 hrs
Accuracy of humidity	< 0.025–1 g/kg rms
Long-term stability humid.	< 2% RH / decade
Accuracy of temperature	< 1 K rms
Long-term stability temp.	< 0.1 K / decade
Spatial distribution	homogeneous over each day
Local time distribution	homogen. over a few months
Mission duration	> 5 years

System Concept

- 4 micro-satellites
  - mass: ~130 kg
  - power: ~80 W
- in a stable constellation – to optimise the quality of occultation measurements (two counter-rotating orbits with 2 satellites each),
- two altitudes (650 km and 850 km) – to optimise the spatial distribution of occultations,
- orbits drifting in local time – to optimise the temporal (local time) distribution of occultations.

Table of Contents

Reference Documents

Høeg, P., A. Hauchecorne, G. Kirchengast, S. Syndergaard, B. Belloul, R. Leitinger, and W. Rothleitner, 1995: *Derivation of Atmospheric Properties Using the Radio Occultation Technique* (ESA Study), DMI Scientific Report, 95-4.

ESA, 1996: *Atmospheric Profiling Mission*, ESA SP-1196(7).

ESA, 1998: *Report of the ESA/EUMETSAT GRAS-SAG – The GRAS Instrument on METOP*, Doc.No. VR/3021/PI (ESA), EPS/MIS/TN/97805 (EUM).

Kirchengast, G., et al., 1998: *ACLISCOPE – Atmosphere and Climate Sensors Constellation Performance Explorer* (ESA Opportunity Missions proposal 1998), IGAM/UG Scientific Report, No. 4/1998.

Høeg, P., and G. Leppelmeier, 2000: *ACE – Atmosphere Climate Experiment* (ESA Opportunity Missions proposal 1998), DMI Scientific Report, 00-01.

ESA, 2001: *WATS – Water Vapour and Temperature in the Troposphere and Stratosphere*, ESA SP-1257(3).

These references are the key documents on ESA related heritage of the ACE+ mission, including lists of references to the full body of the relevant scientific literature.

1. Scientific Justification

1.1 Introduction

1.1.1 Heritage and Previous ESA Initiatives

The ACE+ proposal and objectives are, concerning GNSS-LEO occultations, based on detailed scientific and technical phase-A studies of the *Atmosphere Climate Experiment* (ACE) mission (Høeg and Leppelmeier, 2000) and experiences with the instrument development of the GRAS receiver for the EPS/METOP mission (ESA, 1998).
ACE was selected as the third Opportunity Mission ("hot standby") in ESA's first selection of missions to this element of the ESA Living Planet Programme. The team of the second occultation mission proposed in that first round – *Atmosphere and Climate Sensors Constellation Performance Explorer* (ACLISCOPE) mission (Kirchengast et al., 1998) – joined with the ACE team immediately after the evaluation process.
ACE (and ACLISCOPE) enjoyed, in turn, already considerable heritage from the *Atmospheric Profiling Mission* (ESA, 1996) proposal within the first round of Earth Explorer Core Missions, encouraged by the promise of initial ESA supported radio occultation work by Høeg et al. (1995) and other non-European (mainly U.S. and Russian) activities.
More recently, the *Water Vapour and Temperature in the Troposphere and Stratosphere* (WATS) mission (ESA, 2001) proposed in the second round of ESA Earth Explorer Core Missions – and one of the five final candidate missions – extended the capabilities of radio occultation measurements by adding the LEO-LEO inter-satellite observations for enabling unique tropospheric water vapour measurements. The LEO-LEO technique, which is new and novel with an unprecedented accuracy, has now been included in the ACE+ mission.
In summary, the best elements from all previous work, and the profound experience acquired by doing that work, have been carefully gathered and distilled for this ACE+ mission proposal.

1.2 Science Review

1.2.1 Climate Change

Observations indicate that arctic stratospheric winter temperatures are decreasing. The lowest temperatures in winter seasons occur now in combination with more stable and long-lasting arctic vortices. It is therefore important in the coming years to observe if winter temperatures continue to decrease, leading to more widespread polar stratospheric cloud formation, more stable polar vortex conditions, and stronger ozone depletion.

The atmospheric mass field, characterised by temperature, pressure and water vapour, dominates the main features of the large-scale atmospheric wind systems via the geostrophic balance. This, together with the fact that massive amounts of latent heat are transported via the atmospheric dynamics and released in areas of condensation, underlines the importance of water vapour and temperature in controlling the atmospheric circulation. The latest IPCC scientific assessment report concluded, that the bulk of the observed global warming in the last century mostly was due to natural processes, like solar and internal climate variability. However, the more recent warming during the last 20 years is attributed to the increased emission of greenhouse gases, mainly caused by human activity. This conclusion originates from coupled atmosphere-ocean model simulations and re-analysis studies. Climate change predictions

indicate that the surface temperature of the Earth, globally averaged, may increase from 1.4° to 5.8° over the period of the next hundred years.

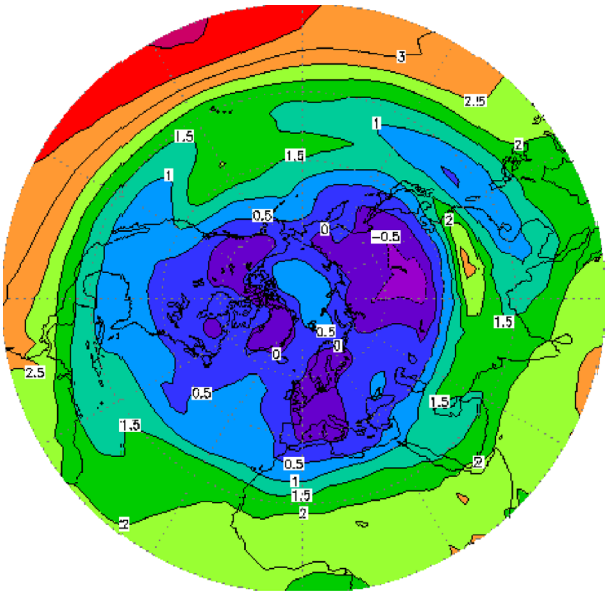

Figure 1. Mean tropopause temperature changes in the Northern Hemisphere. The plotted variations are the mean of the annual differences, when comparing the global re-analysis results covering the periods 1958-1977 and 1978-1997.

Central to most of the least understood internal feedbacks of the applied climate models are those associated with water vapour, giving rise in part to the above span in the temperature increase estimates. Mechanisms of water vapour remain poorly understood because the climatology and atmosphere processes have not been observed with the accuracy, precision, and coverage necessary to understand them. Thus accurate observations of the present temperature and humidity climate, including its variability, are highly important in climate change research as well as in weather forecasting. Establishing unbiased observations of global water vapour and temperature fields throughout the troposphere is the goal of ACE+. The extensive database from the mission will lead to improved understanding of the climatic feedbacks defining the magnitude of climate change and the inter-annual variations in external forcing.

Since chaotic processes dominate the climate system on short time scales, most of the variations in troposphere temperatures and other quantities on time scales up to decades are purely random and not related to external forcing of the climate. To identify variations in external forcing using a short data set of 5 years requires that the chaotic component can be removed. One method to achieve this is to assimilate the ACE+ profiles into an atmospheric climate model throughout the mission period. Together with data sets from other missions the occultation data will give an unprecedented long-term reliable data set for the direct detection of climate trends due to the self-calibrating nature of the occultation measurements.

1.2.2 Stratosphere and Troposphere Weather Forecast

The mission is designed mainly for research on the atmosphere and climate. But it is important to note that the data produced are highly valuable for weather forecasting, too. At present our observational information on the three-dimensional temperature and humidity over the oceans and the tropics is limited to few radiosonde stations and the relatively inaccurate and coarse vertical soundings of temperature and humidity from the orbiting NOAA satellites. This severely limits the predictability over the continent of Europe in relation to synoptic

disturbances developing over the North Atlantic Ocean. There are numerous examples of forecasts missing severe extra-tropical lows, which can be ascribed to missing or incomplete upper air information over the ocean west of Europe. Therefore deficiencies in the current observing system degrade present day weather forecasting. Not only improved temperature and humidity observations are needed to improve the weather prediction skills. Mutual information on wind and mass field must be known in modelling the atmosphere state. In general, information about the wind field is relatively more important than mass field information in the tropics. However for synoptic and larger scale disturbances in the extra-tropical regions there is little doubt that high quality mass field observations over the oceans are the main factor limiting the skill of operational numerical weather prediction systems. Taking into account that data delivery from ACE+ may be achieved within a 3-hour time window makes the mission very attractive for weather forecast and atmospheric analysis.

1.2.3 Satellite Based Atmosphere Profiling

The radio occultation technique has been using signals from the Global Positioning System (GPS) to measure phase and amplitude changes caused by the atmosphere. The observations have been done from low Earth orbiting (LEO) satellites. In the ACE+ mission the GRAS+ (Advanced GRAS) instrument will provide such data for both GPS and GALILEO with unprecedented coverage. The retrieved vertical profiles of the refractive index are used to extract information on temperature, pressure, and humidity as a function of height in the troposphere and stratosphere.

In order to improve the separation of the contributions of water vapour and temperature in the lower troposphere, without using external data, ACE+ will also actively sound the atmosphere using LEO-to-LEO signal transmission at three frequencies around the 22 GHz water vapour absorption line (10, 17, and 23 GHz). Measurements of the occulted phase and amplitude of the electric field from the LEO transmitter at these frequencies will deduce independent information on both temperature and water vapour profiles, which will lead to unprecedented precise atmosphere data. This technique was also suggested in the WATS Core Mission proposal to ESA's Earth Explorer Programme (ESA, 2001).

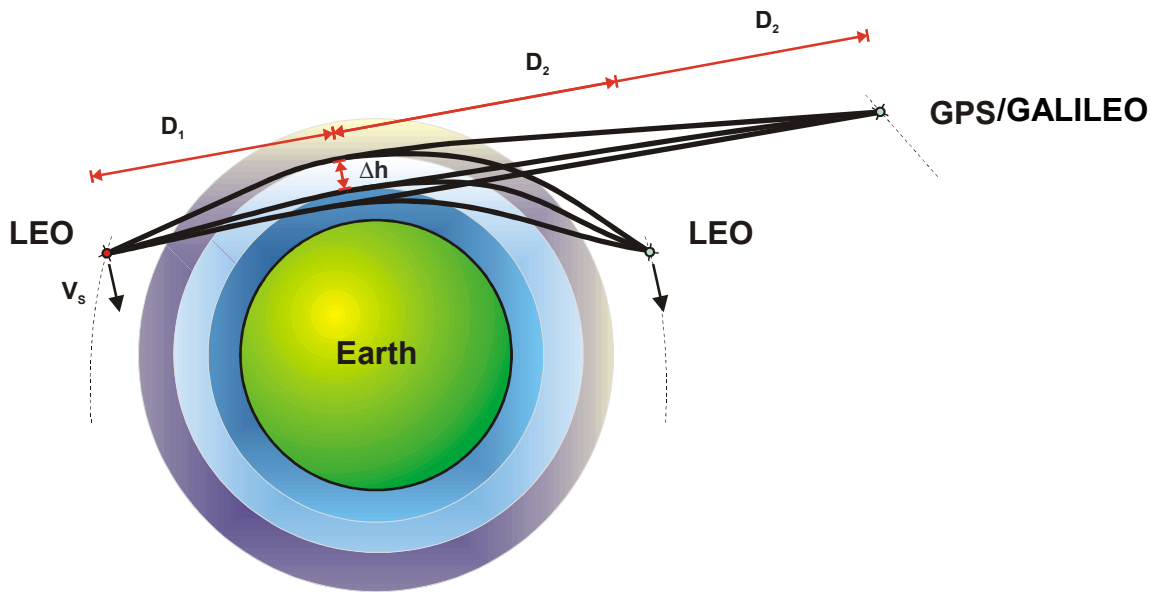

Figure 2. Schematic presentation of the geometry of observations for the retrieval based on the LEO-LEO measurements and the GRAS+ observations (GPS/GALILEO-LEO).

1.2.3.1 Humidity and Temperature Profiling using CALL

The new and novel observations performed by the CALL (Cross-Atmosphere LEO-LEO) instrument in the ACE+ mission will focus on measuring amplitude and phase at different frequencies in order to resolve the main terms for intensity changes in the received signal. Water vapour absorption as function of frequency is not symmetric around the 22 GHz absorption line and also liquid water contributes to absorption (see Figure 3). However, combining three frequencies can essentially remove the effect of liquid water droplets in clouds from the process of estimating the profile of tropospheric water vapour.

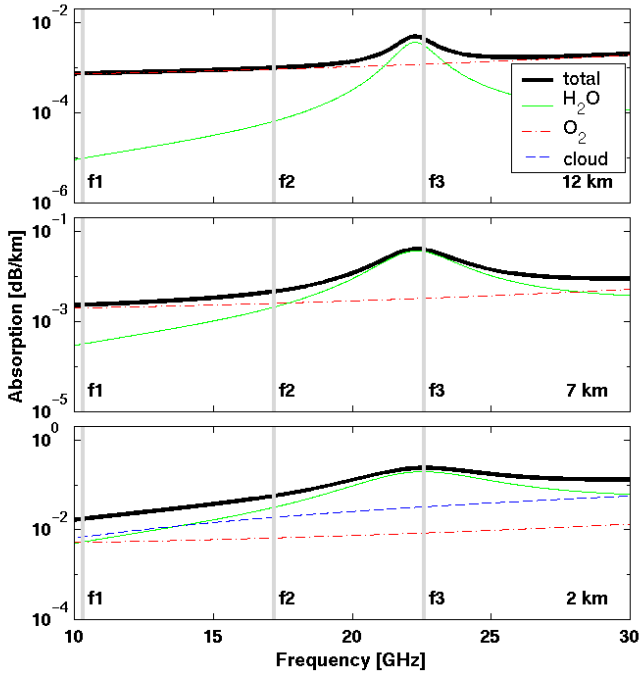

Figure 3. Absorption due to the atmosphere as function of the frequency at three different height levels (2 km, 7 km, 12 km). The suggested three X/K-band frequencies are indicated (approximately; f1 will be ~9.8 GHz in line with frequency regulations). In addition to total absorption, water vapour (H_2O), ambient air (O_2), and liquid water (cloud; lowest panel) absorption are shown.

The transmissions of coded signals, with similar signal structure as GPS, between LEOs are key observables for monitoring the global distribution of atmospheric water vapour in the future. The microwave cross-links are engineered to handle the expected water vapour absorption, while delivering the required measurement precision. In the lower troposphere, where water vapour is abundant, we employ the less strongly absorbed 10 and 17 GHz signal. Transmitted power and receiver antennae gains are sized to achieve a worst-case moisture concentration of 20 g/kg at the bottom of the troposphere in the tropics.

In the upper troposphere, where the moisture concentration can be lower by 4 orders of magnitude, the overriding consideration is detecting the relatively weak effect with sufficient precision in order to achieve accurate moisture measurements. A frequency close to the 23 GHz water absorption line maximum is therefore essential. For the baselined frequencies of ~17.2 and ~22.6 GHz it is required that the instrument can distinguish received amplitude variations of order 0.01 dB. Also, the gain shall be very stable over an occultation and drifts shall be < 0.025 dB per 15 sec (see section 3.1 for details).

Assessment of RMS Retrieval Errors.

Using realistically simulated measurements through model atmospheres with errors consistent with the CALL specifications, we have performed end-to-end retrieval performance analyses

down to retrieved humidity, temperature, and liquid water profiles. The forward modelling/ inversion system employed for the purpose was the one developed by P. Eriksson, Chalmers University, and co-workers in a recently finished ESA study on LEO-LEO performance (Eriksson et al., "Assessment of uncertainties in LEO-LEO transmission observations through the troposphere/stratosphere", ESA contract report).

Figure 4 illustrates the retrieval errors obtained for humidity and temperature. The specific humidity error in the upper troposphere (between ~5 and 12 km) is < 5%, in the lower troposphere < 10%. Sub-Kelvin temperature accuracies are possible. The accuracy decreases higher up towards the stratosphere, where water vapour densities are very low and gain drift plays an increased role. Clouds decrease the accuracy only moderately. Even tropical cumulonimbus was found not to decrease it by more than about a factor of two, consistent with findings of colleagues at Univ. of Arizona (see Annex section 6.4 and their letter of support).

Horizontal variability was not accounted for in this analysis (this would be a phase A activity), but its effects on the quasi-horizontal occultation rays are basically well known from extensive studies in the GNSS-LEO context. They may decrease the humidity accuracy in the lower troposphere (< 5km) also by up to about a factor of 2 (temperature perhaps more compared to this analysis). On the other hand, we did presently use the phase/bending angle information only to correct for defocusing – only accuracy < 5-10% needed for this purpose, which is readily fulfilled. If the bending information is exploited in addition to absorption in an enhanced retrieval algorithm (planned during phase A), the humidity retrieval accuracy below 5 km is expected to again increase significantly.

In summary we have considerable evidence and confidence that CALL as specified will be able to retrieve lower troposphere humidity to < 10% accuracy, and upper troposphere humidity to < 5%, at 1 km resolution, even under horizontally variable and cloudy conditions. We stress that we have assumed relatively conservative specifications: – End-to-end performance analysis results of Univ. of Arizona colleagues (Kursinski and Feng, priv. communications, 2001) for similar instrument quality indicate potential for three times this accuracy (see also Univ. of Arizona letter of support).

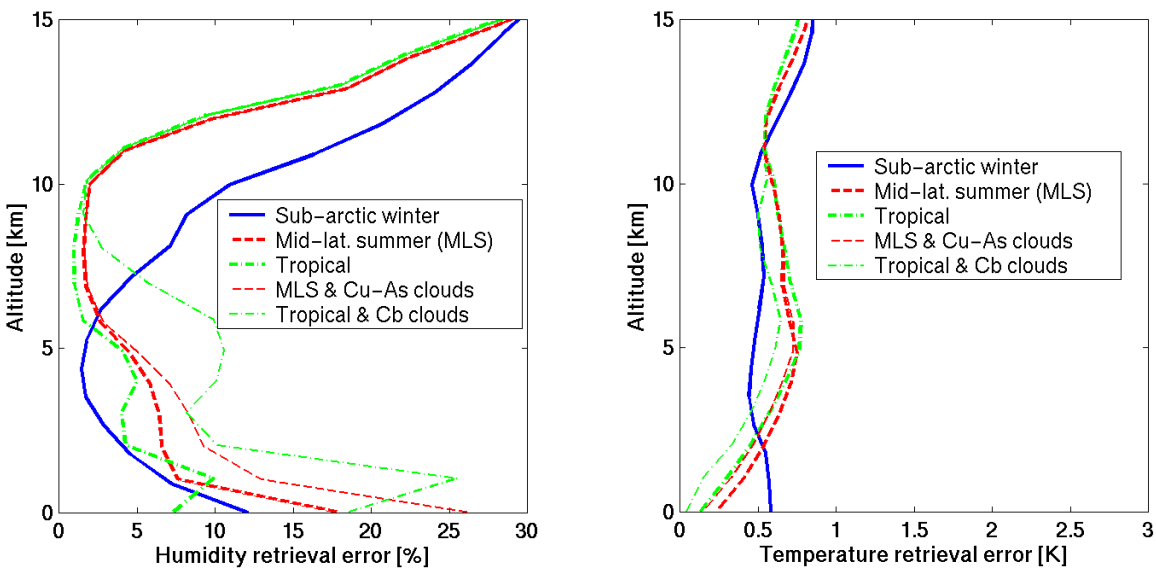

Figure 4. Specific humidity (left) and temperature (right) retrieval errors obtained for realistic simulated CALL transmission measurements (adopted measurement noise and gain drift consistent with CALL specs in section 3.1). Depicted are results for three different standard profiles in clear air (heavy lines) and for two typical cloudy cases (thin lines) (based on FASCODE transmission model clouds), a mixed mid-latitude cumulus/altocumulus case and a tropical cumulonimbus case. A spherically layered atmosphere was assumed. Vertical resolution of the profiles shown is 1 km (estimated by "averaging kernel width" and "Backus-Gilbert spread" measures).

In addition to humidity and temperature, CALL also isolates useful integrated liquid water profiles above 1 km height as the liquid-water retrieval results, Figure 5, indicate. Given that the present algorithm was optimised to isolate liquid water rather than to focus on its retrieval, this result suggests liquid water to potentially be a valuable further data product of ACE+. This potential will be explored in more detail during phase A as well.

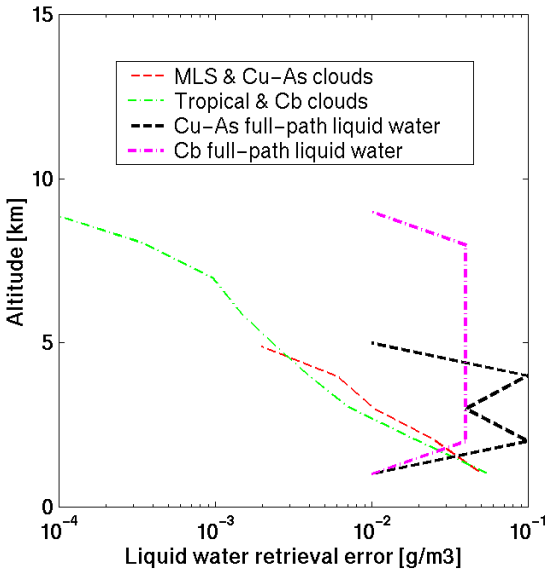

Figure 5. Full-path liquid water retrieval for the two cloud cases involved in Figure 4 above. Mid-latitude mixed Cu/As clouds (light dashed) and tropical Cb clouds (light dashed-dotted). Also indicated are the full-path liquid water abundances assumed for the two cases.

Based on a complementary and totally independent retrieval algorithm, retrieval performance analyses related to CALL where also undertaken at DMI (S. Leroy, priv. communications, 2001). Those findings are consistent with the ones discussed above, which strongly add confidence to the unique water vapour measurement potential of the LEO-LEO method.

Assessment of Residual Humidity Bias Errors.

In addition to assessing rms retrieval errors, potential residual biases have been estimated for CALL observations. The nominal absence of such biases is a key unique characteristic of the self-calibrating LEO-LEO measurements. Nevertheless, several sources may leave small residual biases. These potential residual biases can be summarized as follows:

Residual Bias[1)] Source	**Estimated Residual Specific Humidity Bias[2)]**
Systematics in linear gain drifts	< 1%
Non-linearities in gain drifts	< 0.5%
Time-dependent spectroscopic errors	< 1%
Systematics in horizontal variability	< 1% (>5km), < 2% (<5km)
Impact of clouds	< 2% (>5km), < 3% (<5km)

[1)] *Residual Bias:* The systematic difference left in an average profile over > 40 profiles per grid box per month (cf. climate requirements in section 2.1) compared to the average profile over the corresponding > 40 true profiles.
[2)] The estimate is meant as a "2-sigma" value, i.e., it is expected to be exceeded by a fraction of less than 5% of all climatological average profiles.

Gain drifts are expected to yield sub-percent biases only, due to the high stability, the shortness of the occultation and the short distance crossed from the point of view of an antenna.
Similarly, time-dependent spectroscopic biases are expected to be very small, since they mainly depend on the degree to which the temperature dependence is not modelled correctly in the spectroscopic parameters and the errors thus potentially induced by slightly misestimated climatological temperature changes. As temperatures will be accurately known simultaneously, this effect will be very small. Note that static errors in spectroscopic parameters will not degrade variability and drift estimates; current values for the 22 GHz line allow an absolute accuracy of ~5%. However, new laboratory measurements are expected to readily yield line strength accuracy of < 2% and line width accuracy of < 4%, respectively. Furthermore, the CALL precise transmission measurements themselves will allow to improve spectroscopic coefficients if adequate validation data are available (e.g., from water vapour lidar campaigns).
Horizontal variability will usually not leave systematic effects > 2% even in the lower troposphere, since the errors due to horizontal structure in individual profiles are largely random from profile to profile and averaging suppresses this error (e.g., by a factor of 7 for ~50 profiles). There are small regions such as the edge of the polar vortex during high-latitude winter, which may leave higher systematic bias in monthly averages (not in annual averages) due to systematic deviation from spherical symmetry. However, these biases can be mitigated by an additional step in the climatological processing which uses the large-scale horizontal structure estimates from a first step to account for it in non-spherical re-processing in a second step.
Clouds above 5 km, mainly ice clouds, may leave some systematic error due to non-linear effects from scattering, while absorption by ice clouds will be negligible. The end-to-end error analysis system used for the results above is currently upgraded to allow simulation of scattering by ice clouds and to investigate this effect more rigorously. The effects are expected to be < 2% but may well be even smaller than 1%. Liquid clouds (below ~5 km) may have a slightly higher residual bias since the rms errors in the presence of clouds are higher and since they are more sensitive to a priori liquid water assumptions if such are involved. On the other hand, scattering is expected not to be a major problem in this context thanks to the long wavelengths involved (around 2 cm). Since the retrieval of all three, humidity, temperature, and liquid water, is a well-posed problem based on the three CALL frequencies, careful design of climatological analysis may allow reaching < 2% also for liquid clouds.
Overall, humidity biases are estimated to be < 2% in the upper troposphere, and less than 3% in the lower troposphere (in clear air even < 1% and < 2%, respectively). The cloud estimates involve several uncertainties (they may be too conservative, tentatively), which would need further investigation during phase A. Also precipitation effects are worth further investigation (large raindrops will degrade accuracy), although rain-influenced profiles will be rare.
In summary, it is certain that the LEO-LEO system allows to achieve, thanks to its self-calibration principle, an observation accuracy for humidity trends and variability, including under cloudy conditions, which is unmatched by any present system, including in-situ ones. From a climate research point of view, the particular strength to sense upper troposphere humidity so accurately is especially intriguing.

1.2.3.2 Temperature and Humidity Profiling using GRAS+

The GNSS radio occultation technique uses limb sounding to retrieve the parameters of the neutral atmosphere in the stratosphere and the troposphere. The basis of the radio occultation technique originates from the fact that radio waves of the satellite navigation system (GPS and GALILEO) get refracted along the ray path of the wave, determined by the dispersion relation of the media, as they pass through the atmosphere (either during a rise event or a set-

ting event as seen from the receiver). Thus the refractivity profile can be derived from the observations of phase change and amplitude variations.

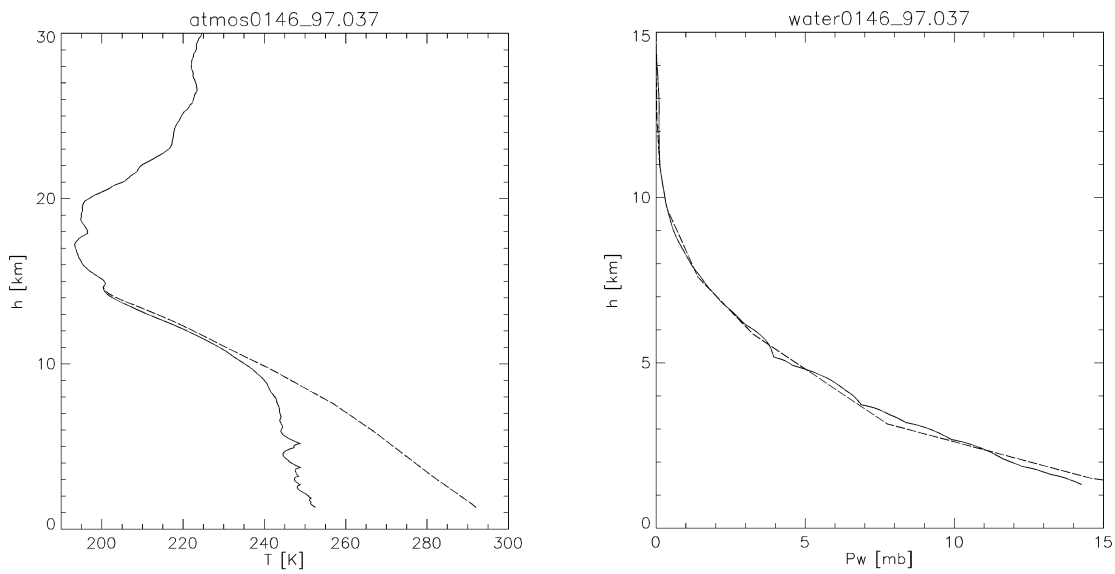

Figure 6. Left panel: Retrieved GPS/MET dry temperature profile (solid line) compared to ECMWF temperature profile (dotted) at the same location. The troposphere difference between the retrieved dry temperature and the ECMWF temperature profile indicates the presence of water vapour. Right panel: Retrieved water vapour profile (solid line) compared to ECMWF profile (dotted). The profile is situated in the tropics at a latitude and longitude of (10.2 S; 63.4 W). The time of the occultation was 5:08 UT, on 6. February 1997.

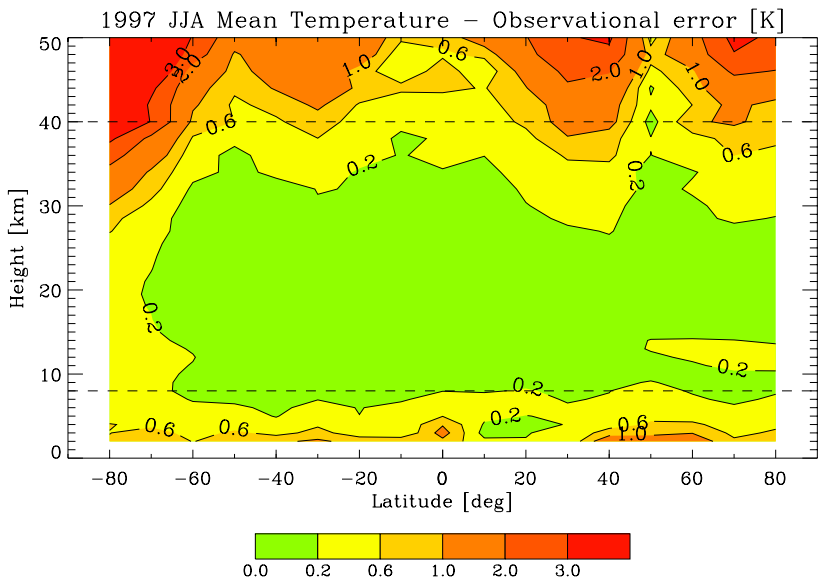

Figure 7. Latitude-height slice of climatological residual bias errors in climatological profiles of dry temperature in 17 latitude bins (every 10 deg from –80 to +80 deg). Each average profile involves ~50 individual GNSS-LEO occultation profiles realistically sampled by an ACE-type 6 satellite constellation within a full JJA (June-July-August) season.

In the stratosphere and upper troposphere, where the humidity is low, refraction is dominated by vertical temperature gradients, and the temperature profile can be retrieved accurately. In the lower troposphere, where humidity effects play the major role, water vapour profiles can be retrieved even allowing for typical uncertainties in the prior knowledge of temperature. In the tropics the typical border between the two regimes is at an altitude of ~7-8 km, while in the dry polar atmosphere accurate temperature sounding is possible down into the atmos-

pheric boundary layer. Figure 6 shows a typical retrieved dry temperature profile and water vapour profile based on GPS/MET observations for tropical conditions. The water vapour retrieval was constrained by a global 24-hour forecast from ECMWF. The method is robust even with errors in the forecast temperature fields of up to 2 K. The error in the water vapour pressure is in average less than 1 hPa in the lower troposphere.
For climate change monitoring based on GNSS-LEO data, dry temperature and geopotential height are very promising. Figure 7 shows a result for dry temperature from a comprehensive and realistic GNSS-LEO climate observing system simulation experiment (conducted by IGAM/UG Graz, Austria, supported by MPIM Hamburg, Germany). About 50 profiles in each of 17 equal-area geographic cells of 10 deg latitudinal width are involved in the climatological average profiles shown for all bins. It is visible that in most of the latitude height-slice the residual biases are below 0.2 K (green area), the biases somewhat increasing down into the troposphere (horizontal variability) and towards the stratopause (decreasing signal-to-noise ratio).
Further details can be found in the ESA reference documents (after Table of Contents), which contain extensive detail on GNSS-LEO occultation methodology and performance as well as extensive references to the relevant scientific literature.

1.2.4 Monitoring of Climate Variability and Change

An important objective of the proposed project is to monitor variations and changes in the climate of the Earth. Such variations can be due to processes internal to the climate system as well as due to external forcing effects. No anomalous forcing is needed to initiate internal climate variability, which basically occurs because of the differential radiative heating between high and low latitudes. Externally forced variations and changes on the other hand are due to anomalous influence such as from a change in the solar constant or an increased greenhouse effect. A further objective is therefore to isolate and detect those climate variations during the mission period.
Externally forced climate variations are often split into terms related to natural and anthropogenic causes, as given in the table below.

Natural external forcings
• Stratospheric sulphate aerosols resulting from certain large volcanic eruptions. These aerosols lead to a heating of the lower stratosphere and cooling in the lower part of the troposphere. • Variations in solar activity, either directly via the energy release from the sun or possibly via solar wind induced variations in the earth's magnetic field and therefore in the cosmic ray flux, which may impact cloud formation. • Variations in the orbital motion of the Earth around the Sun, which quite generally is accepted as the main mechanism initiating the ice ages.
Anthropogenic external forcings
• Increased atmospheric concentration of radiatively active gases like CO_2, CH_4, N_2O and CFCs. These lead to an enhanced greenhouse effect with heating in most of the troposphere, and cooling in the stratosphere. • Stratospheric ozone depletion due to chemical reactions with CFCs. These lead to a cooling in the lower stratosphere and to some extend also in the troposphere. Enhanced greenhouse effects and ozone depletion are related, since a cooling in the polar stratospheric accelerates the photochemical ozone destruction. • Changes in tropospheric aerosol loading due to environmental pollution. • Changes in the land-surface conditions leading to anomalous albedo and evapo-transpiration.

Internal variations mostly occur on relatively short time scales up to a decade or so, but also slower variations involving modulations of the ocean currents, particularly the North Atlantic overturning, are non-negligible. One of the most prominent examples of internal climate variability on time-scales from 3 to 7 years is the well-known El Nino/Southern Oscillation (ENSO) phenomenon, which impacts weather and climate over large - mainly tropical and sub-tropical - regions.

Due to the extremely high accuracy of the retrieved climate data the basic monitoring of climate variations during the mission period is relatively straightforward using modern data assimilation techniques as described in the next section. It is, however, a much more tricky problem to isolate those variations that are due to external forcing from those internal to the climate system, mainly because the mission period is short compared the typical time scales of internal climate variability. Considerable variations in the global mean tropospheric temperature occur as part of ENSO and other internal climatic variability mechanisms and therefore a simple global mean temperature trend during the mission period will not tell us directly if for example the greenhouse effect is increasing. However, by assimilating the observed occultation data into the atmospheric component of a climate model it is possible to monitor variations in the models fit to the observations.

Assuming perfectly observed data, such variations are directly linked to varying external forcing not build into the model. Thus a period, where anomalous heating must be added to the assimilation model in order to match the observations, must also be a period dominated by external forcing. Figure 8 shows an example of anomalous 24-hour forecast of global temperature errors relative to analyses of the temperature in the lower stratosphere (30 hPa) for the same model used for assimilating the observations. The depicted short-term forecast errors are a measure of the quality of the model fit with respect to the observations. Thus these indicators can identify periods of external climatic forcing. On top of a slow trend, two episodes around 1982 and 1991 are observed where the forecasts are too cold, meaning that positive external forcing must have been present. In this case the forcing is well known and related to two volcanic eruptions (El Chichon in Mexico and Mount Pinatubo at the Philippines).

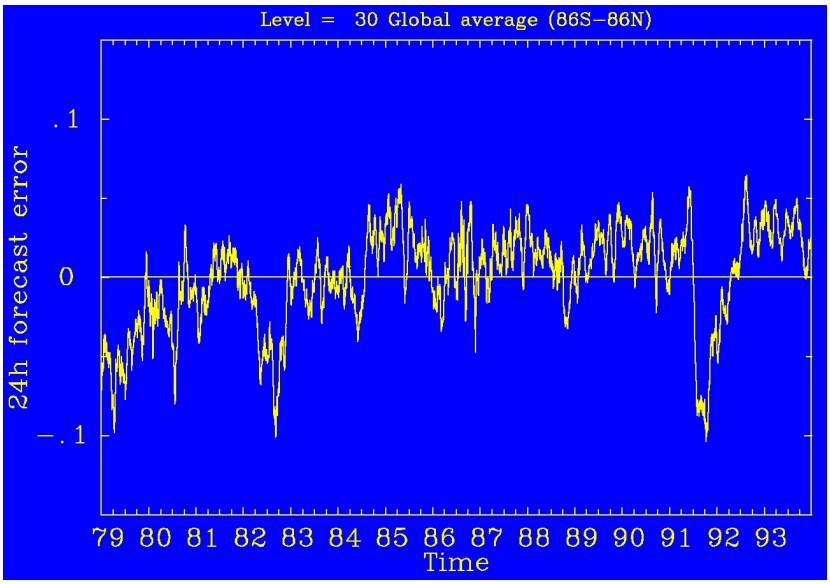

Figure 8. Daily global average temperature differences of forecast errors at the 30-hPa pressure level. The analysis covers the years 1979 – 1993 of the ECMWF 24-hour re-analysis (ERA model). The units in the plot are degrees/day.

Assimilation of atmospheric mass field data, possibly combined with wind data obtained from other data sources, into atmospheric models will be used quite generally in the project to identify variations in the external forcing of the climate. It is important to note that accurate and homogenous data are needed for applying the technique. The above results for the lower stratosphere prove that it is possible to identify signs of varying external forcing.

1.2.5 Data Assimilation Techniques

The temperature, humidity and wind fields are the most important parameter to characterise the mean state of the atmosphere and its long-term evolution. The thermal structure of the atmosphere is likely to change under the impact of anthropogenic forcing as the increase of greenhouse gases and the stratospheric ozone depletion. Both of them are expected to have an effect on the radiative budget, affecting the radiative coupling between the stratosphere and the troposphere, and thus changing the climate of the Earth. In order to reach reliable conclusions on the inferred trends, it is essential to understand the role of the natural forcing (volcanic eruptions, solar activity) as well as the internal forcing (e.g., Quasi-Biennial Oscillation, El Nino Southern Oscillation) on the observed variability.

The determination of the three-dimensional temperature fields in the upper troposphere and in the stratosphere with a high vertical resolution and in absolute values will allow for the estimation of the natural variability. The radio occultation technique will give absolute values of atmosphere temperatures and facilitate long-term trend studies. This will offer the opportunity to study more local phenomena as well. For example, the anti-correlation between the mean temperatures in Scandinavia and Greenland, sudden stratospheric warmings in polar regions, and the breakdown of the polar vortex in conjunction with the injection of particles in the stratosphere, leading to a modification of the radiative budget of the stratosphere.

The ideal model for describing the atmosphere radiative and dynamical relations would essentially only need observations once to initialise all parameters of the model. But due to the complexity of the physics of the atmosphere, existing models have to rely strongly on a range of meteorological observations to be able to come up with any results on the future state of the atmosphere. In order to study and understand the interplay between the model and the observations, it is necessary to perform observation system studies of the climate and weather results. Such verifications-against-reality indicate that the atmospheric profiling observations from data-sparse areas of the Earth will have a large impact on the total error of the atmosphere state description for much larger regions than covered by the observations. Comparative studies of long-term weather analysis results can further strengthen this, when more observations are assimilated into analysis runs and matched with original analysis estimates.

The assimilation of remotely sensed observations, particularly from satellites, into the present atmosphere models gives rise to several difficulties related to the non-linear characteristics of the problem and the method applied. The most frequently used theory in present weather prediction models is the Optimal Interpolation method (OI). This assimilation technique calculates for each geographical region a statistical least square estimation of the meteorological parameter by weighting the preliminary fields (first-guess fields) and observations, utilising their specific error characteristics. Thus observations with good quality characteristics are favoured in the estimates compared to model calculations, while the preliminary fields are given the highest weight, when observations are scarce or show larger error variances. A difficulty in OI schemes, which does not favour most observations from satellites, is the fact that all observations in a predefined interval (e.g., 6 hours) are assumed to be valid at the same

time with a high vertical resolution, thereby omitting any temporal variations in the observables.

The variational data analysis technique provides an effective and consistent method to overcome some of the above mentioned limitations. Through the formulation of the statistical cost function for each parameter covering the observations, the background fields and the physical constraints, it is possible to optimise the combined cost function in space and time (in the four-dimensional variational assimilation method, 4DVAR). The concept of an 'observation operator' for each data type makes it possible to assimilate more raw observations, asynoptic in nature, such as satellite observations, which generally are not made for fixed regions at regular times. So in all, the 4DVAR technique will lead to better estimates of the state of the atmosphere, since available observations are assimilated by searching the best fit to sets of observational time series. Time series, which will also take into account the temporal evolution of the past of each parameter. The 4DVAR-assimilation scheme greatly facilitates the incorporation of remotely sensed information into the weather and climate models due the above-mentioned mathematical method.

1.2.6 Climate Model Development and Validation

One of the most critical uncertainties in future climate projections is the magnitude of climatic sensitivity. Therefore it is of importance that climate models are verified not only with respect to the observed mean climate, but also verified against known external forcings during the ACE+ mission period. The most simple and important example is the annual cycle of solar forcing and the associated seasons. Therefore the annual cycle in climate model simulations with prescribed sea surface temperatures during the mission period will be compared to details in the annual cycle of the retrieved data. This also regards heating rates from release of latent heat in association with monsoons, which can be verified by the method described above.

The most important tool for estimating climatic sensitivity is modern climate models, where atmosphere, ocean, sea ice and land surface models are physically coupled. Concerning the atmospheric component, which is relevant in the ACE+ project, observed data are only included indirectly for determining relatively few (but important) parameters, which at a certain level closes sub-models describing individual processes like convection, cloud formation, turbulence, etc. So far, these parameters have mostly been determined *a posteriori* after a long simulation run. As the quality and accuracy of observed data increases it becomes more and more relevant to use the observations for a more direct calculation of the closure parameters in the models. Such a calculation must be done *a priori*, i.e., before a long free model simulation is performed, in order to minimise the problem of error compensations between the different sub-models (parameterisations). To do this, the observed data must be assimilated into the relevant atmospheric model and the parameters defined in such a way that the forcing (mainly heating) errors are minimised in a global sense. Figure 9 shows as an example proxy heating errors in spring, estimated from average errors in 24-hour forecasts compared to verifying analyses (ERA). Error analyses like these provide valuable information to the possible problems in the assimilation model. In this example, a candidate like wrong albedo input, related to snow cover and vegetation seems likely. But also mountain induced gravity wave drag can be the error source, which after 24 hours is also observed as an error in the mass field.

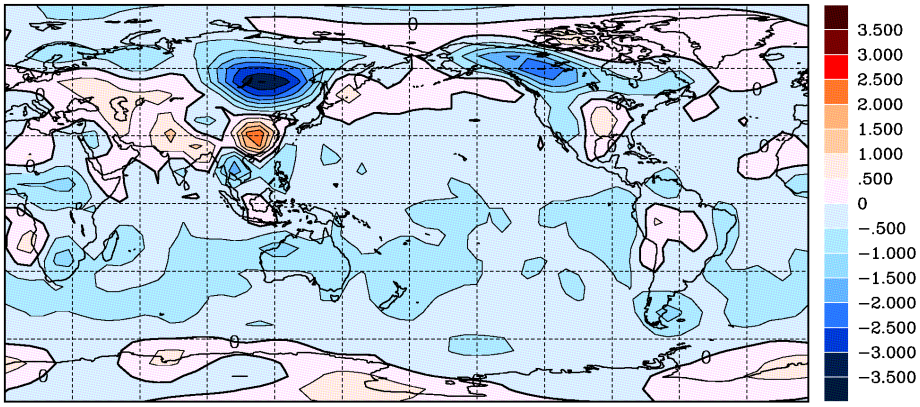

Figure 9. Averaged 24-hour forecast errors in the temperature fields for the years 1979 – 1993. The contours represent the conditions at a pressure surface of 850 hPa in the middle of the month of March. The results are based on ECMWF re-analysis model (ERA). The units are degrees/day.

The technique of minimisation of forcing errors by assimilation of high quality analyses is currently used in a range of European projects. However, a major obstacle when using data from traditional sources, such as radiosondes and vertical profiling from present satellites, are their coarse spatial and temporal resolution and/or lack of sufficient accuracy. Therefore, high quality data as obtained in the ACE+ project are extremely valuable for improving the performance of climate models. Furthermore, and additionally to the simple parameter optimisation, the technique of forcing error estimation can provide valuable guidelines for construction of new parameterisation algorithms (sub-models).

Assimilation – with the purpose of model improvement – of data obtained during the period of the ACE+ mission constitutes an important element of the project. As the data obtained from radio occultations are atmospheric density data, they provide direct information on the atmospheric mass field. Together with wind field information from other data sources during the assimilation, these observations might turn out to be vital for further improvements in climate models.

1.2.7 Space Weather

Since radio occultation measurements performed onboard ACE+ satellites include the capability to yield unique information about the ionosphere on global scale, ACE+ will essentially contribute, as a spin-off, also to space weather services planned in the frame of the European Space Weather Programme (ESWP) during the next decade. Furthermore, the intrinsic ionosphere information shall be used to improve ionospheric correction algorithms applied in neutral gas retrieving procedures to derive excellent upper stratosphere data.

The Earth's ionosphere, ranging from about 60 km up to the bottom of the plasmasphere at about 1000 km, is strongly subjected to space weather phenomena characterized by highly variable solar driven forces such as solar radiation, solar wind, electric fields and currents, thermospheric winds, and particle precipitation. On the one hand, a permanent monitoring of the ionospheric ionisation can provide key information about the underlying physics of space weather to get a better understanding of space weather phenomena and to improve corresponding models and predictions. On the other hand, this information itself shall feed application services to be established within the ESWP to reduce damages or degradation of ground- and space-based technological systems. In particular space based systems using transionospheric radio waves below 10 GHz such as GPS and the future European navigation system GALILEO are vulnerable to space weather effects due to the electromagnetic interaction

of L-band radio waves with the ionospheric plasma, whose density and energy is highly variable in time and space.

Reliable now- and forecasting of space weather phenomena need an improved understanding of the ionospheric behaviour and its close coupling in particular with magnetosphere and thermosphere systems. Applying innovative inversion techniques, tomographic approaches and multi sensor data assimilation methods will allow to,

- monitor and model spatial and temporal electron density structures on global scale with high reliability and accuracy
- forecast the ionospheric behaviour up to hours ahead.

In general, the GNSS-LEO radio occultation technique yields the integrated electron density (TEC- total electron content) along the occultation ray path as a basic data product. TEC can precisely be derived from the differential phases of the coherent transmitted L-band signals of GPS and GALILEO satellites, with the latter planned to be operational in 2008, just at the beginning of the ACE+ mission. The ACE+ satellites, receiving both GPS and GALILEO satellites, will provide about 5000 well-distributed and conditioned data sets per day on global scale.
It should be mentioned that the applied concept of measuring differential phases instead of the small refraction angle (as applied for neutral gas measurements) is robust against inaccuracies of orbit information of GPS/GALILEO and ACE+ satellites and attitude information of the latter as well. So the availability of two-line elements of all satellites involved would be sufficient to derive electron density profiles that agree within 10-20% with comparable vertical sounding data.

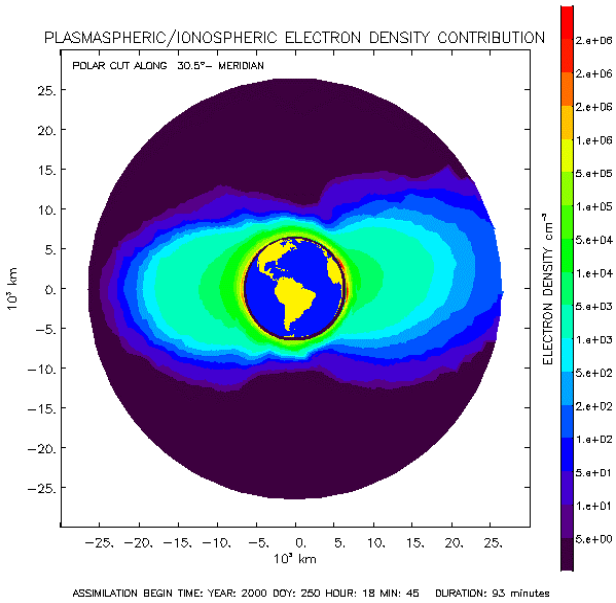

Figure 10. Electron density distribution of the topside ionosphere and plasmasphere in the CHAMP orbit plane (30.5°E) on September 6, 2000. The image is reconstructed applying data assimilation techniques based on one complete revolution of CHAMP starting at 18: 45 UT and ending 20:18 UT (Jakowski et al., 2001; Heise et al., 2001).

Permanent growing GPS ground station networks on global scale have led to progress in ionosphere sounding by constructing quite accurate regional and global TEC maps. But the results are based on lack of the vertical structure of the ionosphere. This can be improved dramatically by merging ground-based electron density data and ACE+ data to construct

three-dimensional electron density distributions of the ionosphere. Combining all ground-based GPS and GALILEO data, available in 2008 and years after, with the large amount of ACE+ data, will lead to a global and continuous reconstruction of the 3D-electron density distribution of the ionosphere with unprecedented resolution and quality.

Figure 10 shows a corresponding data product. The satellite measurements are from the German CHAMP satellite, which carries a similar (though less advanced) receiver as the GRAS+ instrument. Images of this type from each of the ACE+ satellites can be generated every 45 minutes, providing actual information about shape and dynamics of the plasmasphere. This will open an entirely new era for ionospheric research and space weather monitoring. The knowledge of the complete electron density structure from the bottom of the ionosphere to GPS/GALILEO heights will furthermore allow for accurate correction of ionosphere residuals in the neutral gas retrieval procedures.

1.3 Relevance to the Living Planet Programme

The ACE+ mission will contribute significantly to science themes 2 (Physical Climate) and 4 (Atmosphere and Marine Environment) of the Programme, as noted in the Executive Summary, and its scientific objectives address many of the Programme's objectives. The following subsection 1.3.1 highlights this contribution via a concise summary of objectives.

1.3.1 Scientific Objectives

The major goal of the ACE+ mission is:

- To monitor and describe variations and changes in the global atmospheric temperature and water vapour distribution in order to assess climate changes caused by mass field changes and atmosphere dynamics. The observations from the constellation of satellites will reveal important information for weather prediction and contribute to the advanced research in atmosphere physics and climate change.

The main objectives are:

- To establish highly accurate (< 0.003 g/kg and < 3 % in specific humidity) and vertically resolved (< 1 km) global climatology of water vapour in the troposphere;
- To establish a highly accurate (< 0.2 K) and vertically resolved (~1 km) global climatology of temperature in the troposphere and the stratosphere;
- To perform research on climate variability and climate change together with research in improved atmospheric models as well as advancements in NWP;
- To study troposphere structures in polar and equatorial regions;
- To support analysis and validation of data from other space missions;
- To demonstrate a new and novel active atmospheric sounding technique with the CALL instrument;
- To enhance the European observational capability for improved contribution to the international GCOS initiative.

ACE+ seeks to advance our knowledge about atmosphere physics and climate change processes by addressing issues such as:

- Global climate warming and increased averaged atmospheric water vapour levels;
- Tropical heat and mass exchange with extra-tropical regions;
- Transport across subtropical mixing barriers, relevant for information on the lifetime of greenhouse gases;
- Stratospheric winds and temperatures and atmospheric wave phenomena;

- Polar front dynamics and mass exchange together with tropospheric water vapour feedback on climate stability;
- High latitude tropospheric-stratospheric exchange processes related to polar vortex conditions;
- Climatology of Rossby waves and atmospheric internal waves.

1.4 Relevance to Other Programmes

1.4.1 Other ESA Missions

The ESA METOP mission includes a GRAS receiver on each of the satellites to monitor temperature, pressure and humidity profiles of the stratosphere/troposphere. The main objective for these observations is to supply operational data for the European National Meteorological Centres (NMCs). The CALL and GRAS+ instruments in ACE+ will enhance the METOP observations with more precise and detailed profile measurements of tropospheric water vapour together with many more occultation data, thereby improving the coverage in time and space. The GRAS+ instrument has additionally the capability of monitoring the GALILEO satellite signals, too.

1.4.2 World Meteorological Organisation

The CBS Working Group of WMO (WG-SAT) has been assessing satellite capabilities for NWP and climate monitoring purposes. The GNSS atmosphere profiling performed in ACE and ACE+ has been evaluated to be one of the potential improvements for future monitoring of temperature, pressure and humidity profiles of the stratosphere and troposphere. WMO sees these activities very much related to the projects in the Global Climate Observing System (GCOS) Programme.

1.4.3 EUMETSAT

As part of the ground segment for the EPS/METOP mission EUMETSAT has decided to develop the higher-level data products (level 2 and above) at distributed Satellite Application Facilities (SAFs), placed at specific chosen NMCs. These SAFs will also facilitate the production and the delivery of the data products from the EPS/METOP mission. Three SAFs have direct relation to the ACE+ mission, since the data could enhance the products from these SAFs. They are:

EUMETSAT Satellite Application Facility	**Objectives and Tasks**
GRAS Meteorology SAF	The SAF will produce the algorithms for the delivery of the level 2 data products and higher to European NMCs and other operational user groups within meteorology and climate change monitoring. The observations will originate from the GRAS receiver on the satellites and result in profiles of bending angles, refractivity, temperature, pressure and humidity. DMI is leading the SAF in cooperation with UKMO and IEEC.
Climate Monitoring SAF	The SAF will generate data from a range of observational platforms to support the climate change studies and monitoring at European centres for climate change prediction and research. The data products are cloud cover, sea surface temperature, sea ice cover and radiation parameters. The SAF will also perform a statistical evaluation of global vertical profiles of temperature and humidity. DWD is hosting the SAF.
NWP SAF	UKMO is hosting this SAF, which will prepare data processing modules for NWP products and the assimilation of EPS/METOP observations into weather prediction models. The GRAS measurements will also be available at this SAF for NWP purposes.

1.4.4 European Union

The EU's future Framework Programme encompasses a thematic programme on the conservation of the Eco-system. One particular part of this programme focuses on global changes in climate and biodiversity. ACE+ will provide a data set, which will be useful to support projects to be implemented in this context.

1.4.4.1 Previous Studies in 5th Framework Programme

In the EU 5th Framework Programme the following major projects have been treating ground-based and satellite observations of the atmosphere using GPS signals, along the lines given in this proposal: WAVEFRONT, MAGIC, CLIMAP, and COSY (a new proposal put forward in 2001).

1.4.4.2 GMES

The EU GMES programme (Global Monitoring for Environment and Security) will address the monitoring of the atmosphere applying satellite measurements. The ACE+ mission would fit naturally into this European capability to assess changes in the environment and the managing of risk for the European populations and nations.

1.4.4.3 COST

The EU COST actions 716 and 723 have and will be treating radio occultation measurements and their capability for the European monitoring of the troposphere. ACE+ would follow these activities in the coming GMES initiatives.

1.4.5 Other International Programmes

The ACE+ mission complies with the requirements and descriptions in the below mentioned programmes and complements satellite observations from the EPS/METOP mission (EUMETSAT/ESA), the ADM and EarthCARE (ESA), the GCOM satellites (NASDA) and the NPOESS satellite programme (NOAA/DOD/NASA).

- UN Kyoto Protocol
- IPCC recommendations
- WCRP CLIVAR and GEWEX programmes
- WMO conclusions on GCOS (Global Climate Observing System)
- WMO satellite requirements for climate monitoring and NWP (Numerical Weather Prediction)
- SPARC recommendations for monitoring stratospheric processes

1.5 Science Summary

1.5.1 Need and Usefulness

The role of water vapour in the atmosphere is mainly associated with two processes: condensation/evaporation and radiation. The role of condensation/evaporation is very important, since it constitutes the main diabatic heat source within the troposphere. This heating is generally very strong in the inter-tropical convergence zone and in the monsoon areas. Thus it is a key player in the maintenance of the Hadley cells and the monsoons. Furthermore, the overall poleward and vertical transports of water vapour (i.e., latent heat) via the atmospheric dynamics is highly crucial in maintaining the general circulation of the atmosphere - including the high latitude wind systems. Thus the release of latent heat associated with condensation is

the main mechanism driving several regional and local atmospheric circulation phenomena like tropical storms, hurricanes and severe thunderstorms.

From a radiative point of view, water vapour is the dominant greenhouse gas in the atmosphere due to its high concentration and variability relative to the other well-mixed greenhouse gases like CO_2, CH_4, N_2O and CFC's. It plays a dominant indirect radiative role via clouds and precipitation, and thus is a key parameter of the whole climate system. This regards both the maintenance of the present climate and its internal variability as well as the changes in the climatic feedback mechanisms, which determine the sensitivity of the climate through the response to variations in the external forcing.

Water vapour participates in most important atmospheric processes, but remains relatively poorly understood in climate change. The atmospheric mass field, characterised by temperature, pressure and water vapour, dominates the main features of the large-scale atmospheric wind systems via the geostrophic balance. This, together with the fact that massive amounts of latent heat is transported via the atmospheric dynamics and released in areas of condensation, underlines the importance of water vapour in controlling the atmospheric circulation.

The latest IPCC scientific assessment report concluded that the bulk of the observed global warming in the last century mostly was due to natural processes, like solar and internal climate variability. However, the more recent warming is in the report attributed to the increased emission of greenhouse gases. Central to most of the least understood internal feedbacks of the applied climate models are those associated with water vapour, giving rise in part to the span in the temperature increase estimates. Mechanisms of water vapour remain poorly understood because the climatology and atmosphere processes have not been observed with the accuracy, precision, and coverage necessary to understand them. Thus accurate observations of the present temperature and humidity climate, including its variability, are highly important in climate change research. Establishing unbiased observations of global water vapour and temperature fields throughout the troposphere is the goal of ACE+.

All the different stages of water (vapour, clouds, rain, ice crystals) in the hydrosphere are observed in the hydrological cycle of the atmosphere. The amount of water in the atmosphere is small compared to the total amount of water in oceans, lakes, rivers, groundwater and polar ice caps. But the time scales regarding changes in atmospheric water vapour are short, requiring a highly dense set of observations to estimate energy fluxes and density variations. ACE+ is the only mission able to deliver detailed temporal observations for monitoring these phenomena with a good spatial coverage over a longer time period.

1.5.2 Uniqueness and Complementarity

ACE+ is unique among planned and developing missions in that it profiles water vapour throughout the upper and lower troposphere regardless of weather conditions. No other space agency in the world is for the moment considering a similar mission. Thus ACE+ is unique and the state-of-the-art in monitoring atmospheric water vapour together with the physical and the dynamical processes controlling and regulating the mass and energy exchange in the atmosphere of the Earth.
ACE+ offers a key complement to the planned nadir-sounding spectral high-resolution infrared instruments in that clouds are largely transparent to ACE+. It also offers a fundamentally different alternative to the traditional sounding techniques, thus providing an invaluable source for validation where data products are similar in nature.

The ACE+ mission is primarily driven by climate research with applications to weather, whereas conventional water vapour sounders are instruments for weather applications. ACE+ is designed to obtain the climatology of tropospheric water vapour with unprecedented precision on global scales. The self-calibration nature of the observations allows an accurate tracking of secular changes in atmospheric water vapour content on short and long time scales.

The current operational systems of satellite sounding radiometers (passive infrared and microwave) provide information on tropospheric and stratospheric temperature and on tropospheric humidity with global coverage at high horizontal resolution. But the systems are deficient in vertical resolution since individual spectral channels have weighting functions of width 7–10 km. So the combined vertical resolution of the system is only 2-3 km in cloud-free areas and worse in cloudy areas, with humidity accuracies of 20 %. Future microwave sounders will have similar performance. The sounders on geostationary satellites, such as SEVIRI on MSG (Meteosat Second Generation), will equally not improve on vertical resolution or accuracy, but will improve on coverage and repeat rate of the observations. So all the mentioned systems do not fulfil the requirements for climate research and daily meteorological applications. ACE+ derived profiles of temperature and humidity are making a significant contribution beyond present knowledge of water vapour structures in the troposphere and temperature profiles in the stratosphere.

1.5.3 Contribution to European Earth Observation Capabilities

ACE+ complements satellite observations from the missions EPS/METOP (EUMETSAT/ESA), GOCE, ADM and EarthCARE (ESA). The mission will be of the first of its kind in LEO-LEO water vapour profiling, which will strengthen and enhance Europe's leading role and capability in monitoring the changing climate and the environment of the Earth.

ACE+ will benefit several other missions planned in the timeframe of the next ESA Core Mission Earth Explorers. It will widely extend the measurements made by GRAS on METOP and GPSOS on NPOESS. It will add complementary mass field measurements to the wind field measurements performed by the ESA ADM mission. ACE+ will also enhance and complement other missions aimed at observing atmospheric processes, as the US-Taiwan mission COSMIC. ACE+ will provide precise water vapour and temperature profiles that can support the modelling of atmospheric processes, as suggested in the EarthCARE proposal to the ESA Core Explorer Programme. ACE+ will additionally answer critical issues in the international programmes and enhance our understanding of the changes in the climate of the Earth.

1.5.4 Timeliness

Calculations of climate warming indicate that the amount of water vapour in the atmosphere may increase as much as 5 % over the next 20 years. The strong indications of climate changes call for a mission like ACE+ to enhance and substantiate the observational database for the predictions. The ACE+ mission will further extend the international community efforts in quantifying the changes outlined in the UN Kyoto Protocol, the IPCC recommendations, the WCRP CLIVAR and GEWEX programme, the WMO GCOS programme, the SPARC recommendations for monitoring stratospheric processes, the EU GMES Programme, and the EU COST Actions 716 and 723.

The amount of GNSS observations in the ACE+ constellation is more than 5000 daily atmosphere profiles, globally homogeneously distributed over the Earth with a horizontal resolution of about 300 km. The number of LEO-LEO occultations obtained per day is around 230, with

similar horizontal resolution as GNSS-LEO. An important feature of the radio occultation technique is its "all-weather" capability. The measurements also have a high long-term stability, with no significant calibration problems, a feature particularly important for climate change monitoring. Another key strength of the radio occultation measurements is their high vertical resolution, which well matches the physical scales of the atmosphere. The vertical resolution is limited only by diffraction effects and becomes less than 1 km for most of the vertical profile.

2. Mission Characteristics

2.1 Scientific and Technical Requirements

2.1.1 Atmospheric Monitoring

The GRAS Science Advisory Group of ESA/EUMETSAT has in their User Requirements Document (ESA, 1998) formulated requirements for GRAS climate monitoring and NWP applications. The requirements shown in the tables below reflect these findings and are taken as guidelines for the ACE+ mission.
The WATS Mission Assessment Report (ESA, 2001) for the ESA Earth Explorer Core Mission Programme gave detailed descriptions of the observational requirements for a mission similar in many respects to ACE+, including on LEO-LEO observations. These are also integrated in the below summarized requirements with the definitions of the troposphere and stratosphere regions based on the WMO specifications.

Atmosphere Region	Abbreviation	Pressure levels	Altitudes
Lower Troposphere	LT	1000 hPa - 500 hPa	Surface - 5 km
Higher Troposphere	HT	500 hPa - 100 hPa	5 km - 15 km
Lower Stratosphere	LS	100 hPa - 10 hPa	15 km - 35 km
Higher Stratosphere	HS	10 hPa - 1 hPa	35 km - 50 km

Table 2-1: Height domain definitions according to WMO.

2.1.2 Temperature and Humidity Profiling of GRAS+

Parameter		Temperature	Humidity
Horizontal domain		Global	Global
Horizontal sampling		1.0°x1.0° - 2.5°x2.5°	1.0°x1.0° - 2.5°x2.5°
Vertical domain		Surface - 1 hPa (0 - 50 km)	Surface - 300 hPa (0 - 10 km)
Vertical Resolution	Troposphere	0.5 km	0.5 km
	Stratosphere	1 km	–
Time domain		> 5 years	> 5 years
Time resolution		1 - 10 years	1 - 10 years
Long-term stability		< 0.1 K/decade	< 2% RH/decade
Number of profiles per grid box per month		> 40	> 40
Accuracy	Troposphere	< 1 K	< 10%
	Stratosphere	< 1 K	–
Timeliness (NWP)		3 hrs	3 hrs
Timeliness (Climate)		30–60 days	30–60 days

Table 2-2: Requirements for GNSS-LEO observations.

2.1.3 Humidity and Temperature Profiling of CALL

Parameter		Specific Humidity	Temperature
Horizontal Domain		Global	Global
Horizontal Sampling		100–500 km	100–500 km
Vertical Domain		Surface to 10 hPa	Surface to 100 hPa
Vertical Sampling	LT	0.4–2 km	0.3–3 km
	HT	0.5–2 km	1–3 km
	LS	–	1–3 km
	HS	–	5–10 km
Time Sampling		3–24 hrs	3–24 hrs
RMS Accuracy	LT	0.25–1 g/kg	0.5–3 K
	HT	0.025–0.1 g/kg	0.5–3 K
	LS	–	0.5–3 K
	HS	–	1–3K
Timeliness (NWP)		1–3 hrs	1–3 hrs
Timeliness (Climate)		30–60 days	30–60 days
Time Domain (Climate)		> 5 years	> 5 years
Long-term Stability		< 2% RH/decade	< 0.1 K/decade
No. of profiles/ grid box/month		> 40	> 40

Table 2-3: Requirements for LEO-LEO observations.

2.1.4 Electron Density Profiling and Space Weather

Observational requirements for ionospheric research strongly depend on specific topics of interest, since the electron density in the ionosphere varies up to several orders of magnitudes over a wide range of spatial and temporal scales. For this reason requirements depend on the major scientific issues/research that need to be addressed. Table 2-4 gives requirements, which all can be fulfilled if the troposphere/stratosphere requirements above are met.

Parameter	Climatology	Storms and TIDs	Space Weather Monitoring
Horizontal resolution (km)	1000 – 2000	50 – 500	100 – 1000
Horizontal domain (km)	Global	Regional/Global	Global
Vertical resolution (km)	2 – 30	0.1 – 15	5 – 30
Vertical domain (km)	90 – 20000	60 – 20000	90 – 20000
Time resolution (hrs)	1 – 3	0.01 – 1.5	0.1 – 3
Time domain (yrs)	> 5	> 1	> 1
Accuracy (day-time, %):			
Electron density	< 10	< 10	< 15
TEC	< 5	< 5	< 10

Table 2-4: Requirements for ionosphere and space weather observations.

2.2 Mission Specific Characteristics

2.2.1 Mission Duration

The purpose of both the GRAS+ and the CALL instrument is to extract data over extended periods, in fact the longer the better. This concerns both major objectives of the mission in providing data in support for deriving atmospheric parameters:

- Climate change observations require data over a long period to extract trends under similar yearly conditions.
- Weather prediction. The use of data from occultations for NWP assimilation has been prototyped and proven to be useful in case of GPS occultations (GPS/MET and ØRSTED

data with CLIMAP) but large amounts of data from over an extended period have never been available. The continuous provision of such data for assimilation under different and repeated weather conditions serves very well the needs of NWP. Furthermore the real time production of products serves the proof of operational aspects.

A five years mission life is planned taking into account the non-redundant architectures of the satellites as dictated by satellite and launch expenses.

2.2.2 Mission Timing and Potential

There is no current mission flying or planned that matches the combined GRAS+ and CALL measurements of the ACE+ mission in terms of simultaneous global geographic coverage and revisit plus vertical resolution in providing atmospheric parameters with special emphasis on water vapour.

The present CHAMP and SAC-C missions and the future GRACE and METOP missions are all examples of single satellite missions that will supply GPS occultation measurements, but only METOP will certainly range into 2008 and beyond. The GRAS instrument for METOP is the basis for the GRAS+ instrument of the proposed ACE+ mission. The measurements of these missions are leading to the direct and absolute extraction of temperature and dry atmosphere pressure without calibrations except at low elevations where the independent measurement of ('wet') temperature is needed by e.g. balloons in order to derive the water vapour pressure. The measurements of these missions are not synchronised to optimise the coverage and revisit. The COSMIC mission - presently planned for about year 2005, but still uncertain - may optimise coverage and revisit with six satellites measuring GPS occultations.

The proposed ACE + mission will complement and hugely enhance the missions, which are still operating beyond year 2007. The additions of GALILEO based occultation measurements will optionally double the amount of GNSS occultation measurements. Presently no other mission is, however, in addition foreseen to provide CALL type of measurements with the associated extraction of absolute water vapour contents through measuring the attenuation. These measurements are performed globally in the same region as the GNSS measurements thus supporting also these measurements.

2.2.3 Other Dependencies

ACE+ does not depend on any data from other satellites or data sources needing special synchronisation of development and operational availability. The sufficient ground segment data collection of GNSS measurements in support of orbit determination and GNSS clock extraction is already available for GPS and similar data servers will be available for GALILEO when available. The use of multiple satellite measurements of the same GNSS from the proposed constellation may further complement the auxiliary data provisions.

2.3 Products and Algorithms

The first table below present for the GRAS+ and the CALL instrument the key data and products: Input data (level 0) from instruments data download from satellites and from data acquisition from ground based servers, intermediately calculated data (level 1) and final products (level 2 and level 3).

Level	Key Data and Products	
	GRAS+	CALL
Level 0	LEO-GNSS received tracking data including occultations: L1 and L2 carrier phase and pseudorange.	LEO-LEO tracking data: Received carrier phase and amplitude at three frequencies (about 10, 17 and 23 GHz). In addition pseudorange/coded phase signals at the three frequencies.
		LEO transmitter data: Amplitude at the three frequencies (for gain corrections, phase or clock extracted as LEO clock at level 1for clock corrections)
	• GNSS Ephemeris data (from IGS) • GNSS health data • (Ground) Fiducial station GNSS tracking data • Earth orientation data • LEO/Instrument housekeeping data • LEO attitude/pointing data	
Level 1	• Determined LEO ephemeris data • GNSS ephemeris data (IGS delivery) • Extracted GNSS clocks • Extracted LEO clocks • Residual phase observations extracted	
	Bending angle profiles calculated	Bending and absorption profiles calculated
	(Real) Refractivity profiles calculated	Complex (real and imaginary) refractivity calculated
Level 2	• Temperature profiles • Pressure profiles (and geopotential height profiles) • Humidity profiles • Error profile estimates • Vertical integrated water vapour (all profiles as a function of height)	
Level 3	• Global field maps: Temperature, pressure, humidity • Global trend maps: Temperature, pressure, humidity	

Table 2-5: GRAS+ and CALL Ground Processing: Key data and products

The products produced can be characterised as follows:

Temperature

One GRAS+ LEO instrument will produce 80 – 90 temperature profiles per orbit covering the troposphere and the stratosphere (GPS and GALILEO assumed). The accuracy of the observations are 1 Kelvin or better at altitudes ranging from 2 km to 40 km. Given approximately 14.5 orbits per day, the 4 ACE+ satellites will produce about 5000 high-quality temperature profiles per day.

Pressure

For GRAS+ the uncertainty in the pressure profile is less than 0.3 % in the range from 10 – 1100 hPa. The coverage equals the temperature profile data since they originate from the same observables as the temperatures.

Humidity

The GRAS+ tropospheric humidity profile is retrieved from solutions constrained by external wet temperature information. The accuracy of the latter need not be better than 2 Kelvin. This method gives an uncertainty in the water vapour profile that is less than 20 %, in the range from 1 hPa to 45 hPa. The level 1 and 2 algorithms for occultation products have all been defined implemented, tested and verified. Testing and verification have partly been done on the

basis of GPS/MET data and ØRSTED data, partly by end-to-end simulations. The central level 1b and level 2 Abel transform algorithms for refraction have been tested and verified considering a wide range of conditions pertaining to global ionospheric and tropospheric behaviour.

For CALL water vapour is determined absolutely within the range of < 0.003 g/kg or < 3%, whatever is higher. The CALL algorithms have been prototyped and sensitivity and accuracy analyses have been performed (see section 1.2).

The vertical resolution in all the above results is < 1 km.

The Table below presents the principal related algorithms at each of the same levels.

Level	Key Algorithms	
	GRAS+	**CALL**
Level 0	• Frame quality and sequence check plus clean up • Format Conversions	
Level 1	• POD calculation and correction • Relativistic effect correction • Phase slip detection /correction • Instrument corrections (e.g. antenna gain vs. temp and pointing for CALL) • GNSS and LEO Clock extraction and correction (including effects of different resolution for L1 and L2 for GRAS, etc.)	
	Signal conditioning for Ionospheric corrections	
		Liquid water correction (e.g., using freq1 vs. freq2 results and freq2 vs. freq3 results)
	Doppler extraction/Multipath corrected inversion (Back Propagation/Canonical Transform)	Complex (amplitude and phase) residual extraction/Multipath corrected inversion (Back Propagation/ Canonical Transform)
	Bending angle determination with frequency bias correction	Extracting Complex Profile with Bending Angle Profile and Attenuation Profile
	Ionospheric correction	ionospheric correction (optional)
Level 2	• Ideal gas equation • Hydrostatic equilibrium	
	• TEC calculation • Electron density calculations • F2 and E layer peak detection • Scintillation calculations	
Level 3	• Assimilation • Field maps • Trend analysis	

Table 2-6: GRAS+ and CALL Ground Processing: Key Algorithms

2.4 Observation Requirements

Two occultation applications shall be supported

- LEO-LEO occultations, called CALL
- GPS and GALILEO occultations received at LEO, called GRAS+

The number of satellites and the number of launches allowed in the below considerations are determined by cost constrains. 4 satellites are the present limit and maximum 2 launches of the Rockot type and expense.

At least two counter rotating orbits are essential for the execution of the CALL application. The counter rotation is necessary to establish the satellite-to-satellite signal links with atmospheric traces of ascending or descending vertical profiles. The obits shall preferably be parallel. This is important to achieve the optimal satellite-to-satellite link quality through the antenna beam angle. Separation of the orbits would result in dramatic changes to the necessary antenna gain or the need to execute quite complex antenna steering. Taking into account the need for the same drift of the two parallel orbits the solution is 90 degrees inclination. Orbits with this inclination further provide for excellent coverage for the GRAS+ application with some preference for the polar regions. With 2 launches we place 2 satellites in each orbit. One orbit will contain satellites with GRAS+ and CALL receivers and the other orbit satellites with GRAS+ receivers and CALL transmitters.

4 satellites are launched two at a time in separate 90 degree inclination orbits which are 180 degrees separated along equator, i.e., counter-rotating orbits. The altitude of the two orbits are different, one at about 650 Km, the other at about 850 Km, the minimum 200 Km altitude difference being essential for the CALL application to support the daily global movement of the CALL occultation points along all latitudes.

During a period (one month or more) after launch the two satellites of each orbit are separated slowly to an about 90 degrees separation in the circular orbits. A 180 degrees separation that may seem reasonable for good global coverage will result in characteristic coverage pattern where some regions are not well covered per day, since all events would sit along lines.

The GRAS+ application is impacted by the need for parallel counter rotating orbits that in praxis is limiting the coverage to the one achievable by 4 satellites in one orbit and even a bit worse since the satellites are not always evenly dispersed in the orbit. The satellites are changing positions relatively to each other due to the counter rotation. Furthermore, the orbits have not the same altitude. The number of occultations is not impacted and the geographical coverage is good over a day. However, the overall revisit is less good than the one normally achievable with 4 satellites in one orbit. The GALILEO will double the number of occultations and complement the somewhat reduced coverage for the equator regions achievable with the given orbits and GPS alone.

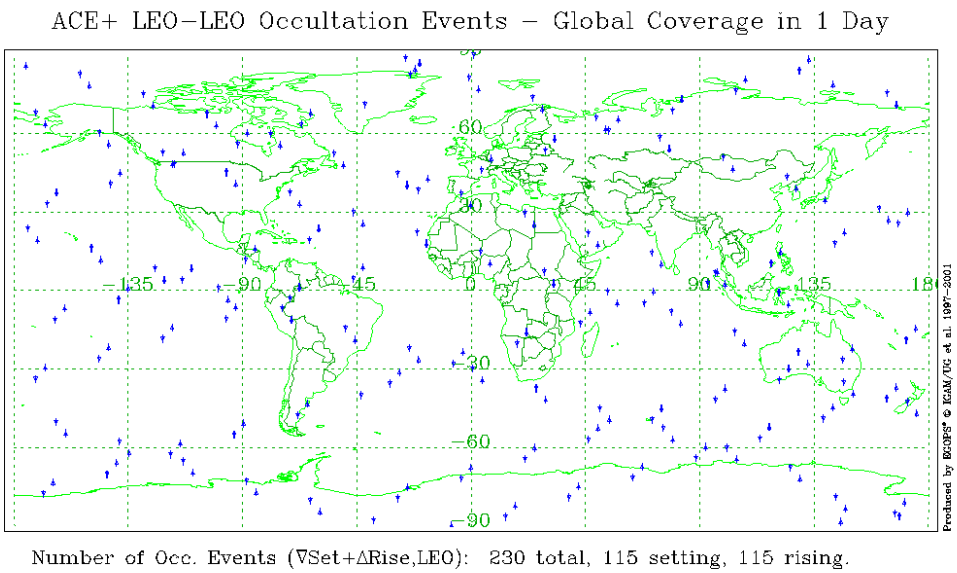

Figure 2-1: Global Daily Distribution of CALL Occultation Events

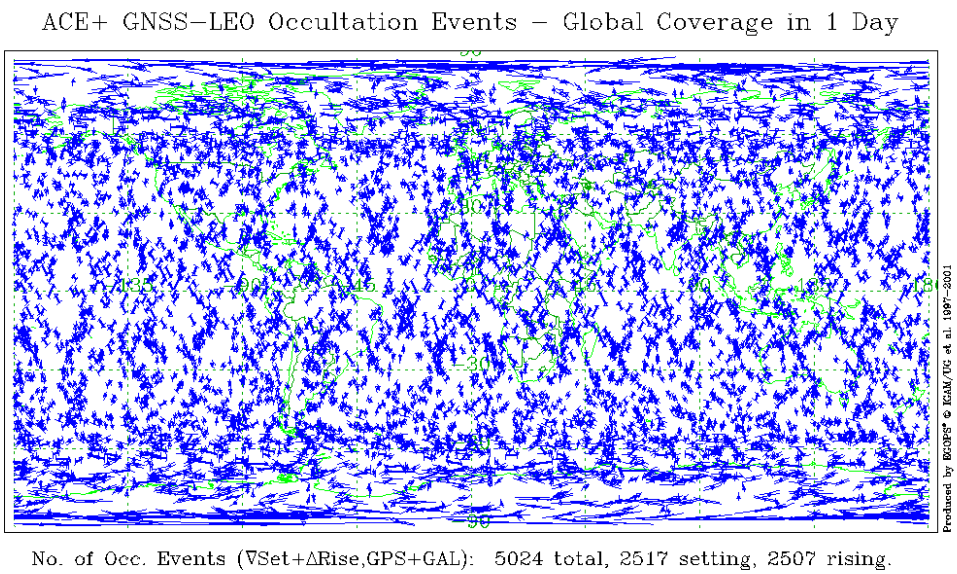

Figure 2-2: Global Daily Distribution of GRAS+ Occultation Events

Figures 2-1 and 2-2 show the resulting coverage diagrams for CALL and GRAS+ (GNSS = GPS and GALILEO) coverage over one day. For CALL it is seen that the non-antipodal satellite positions avoid the otherwise characteristic "diamond" pattern (cf. ESA, 2001). Computations for a full month confirmed that CALL provides about 7000 very well distributed events per month; already a highly valuable humidity dataset for climate.

3. Technical Concept

3.1 Payload Instrumentation

3.1.1 Architecture

The ACE+ satellites carry instruments with two main functions:

- a precision L-band receiver and related antennas for GNSS occultations, denoted GRAS+ (Advanced GRAS) for the next generation GNSS receiver. This is foreseen to include some of the evolution identified within the present ACE study. The capability will also be enhanced to support the CALL function of the instrument.
- a precision X/Ku/Ka-band transmitter or receiver and related antennas for LEO–LEO occultations, denoted as Cross-Atmosphere LEO-LEO Sounder (CALL).

GRAS+ and CALL constitute functionally two instruments. However, CALL relies on GRAS+ in order to navigate and time stamp data. With the envisaged coding scheme, the final down-conversion and despreading will be identical to those for GRAS. Several functions and operating modes are also identical, such as frequency generation, acquisition and tracking. There is therefore a great advantage to build the CALL instrument as an add-on unit to the GRAS+ electronics unit, see below.

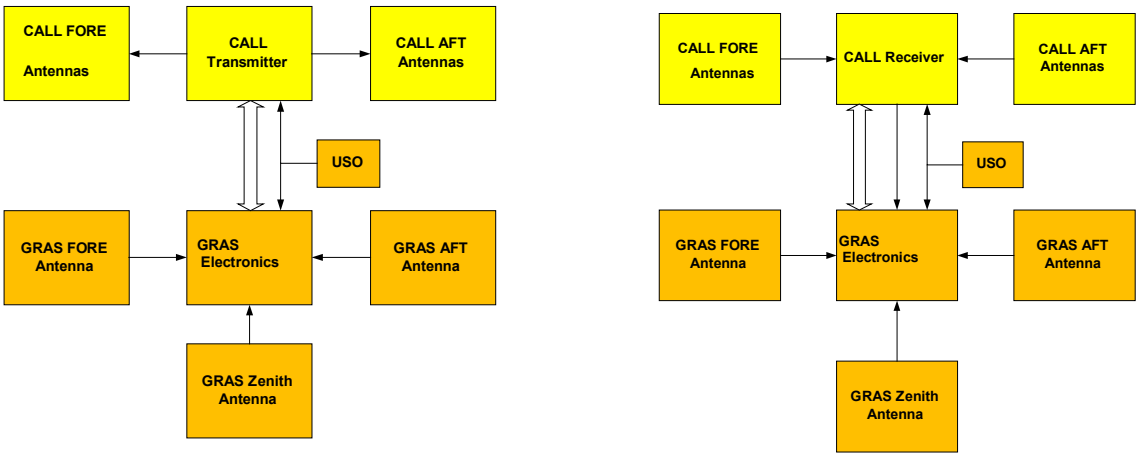

Figure 3-1: Instrument block diagrams for transmitter and receiver

3.1.2 GRAS+

Development of a miniaturised GRAS+ instrument is ongoing at SES within the ACE study, ESA contract 14397/00/NL/DC, and is based on the existing METOP GRAS instrument. The GRAS+ instrument consists of three antennas, one electronics unit, and a separate reference oscillator. GNSS signals are received through the antennas and are filtered and amplified in the Low Noise Amplifiers (LNAs) located in the GRAS+ electronics unit. Following amplification, the signals are down-converted, despread and correlated using locally generated GNSS replicas.

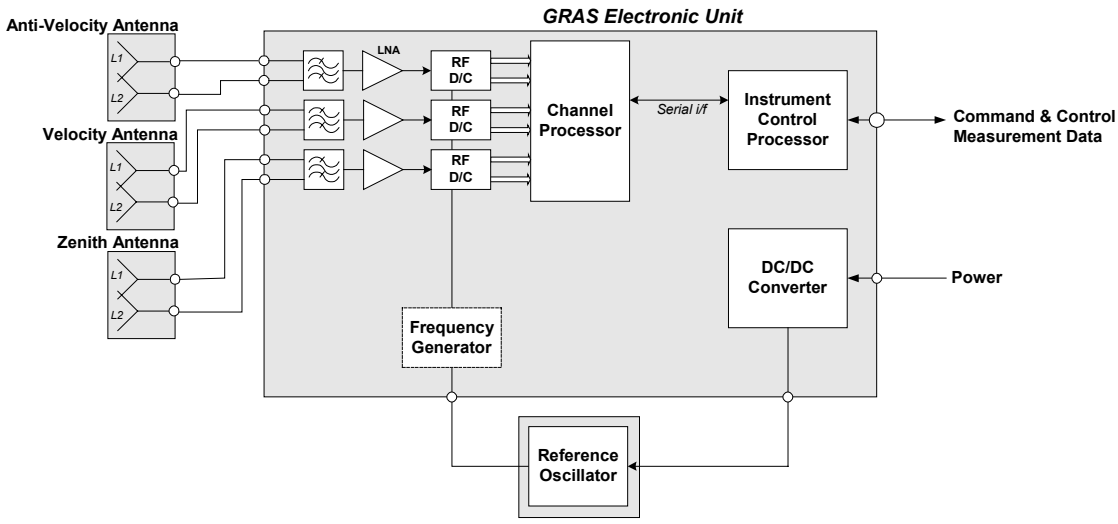

Figure 3-2: GRAS+ instrument functional block diagram

The occultation antennas are considerably smaller than their METOP counterparts. The antenna baseline 1 x 4 antenna elements and zenith antenna contains a single L1 and L2 element.

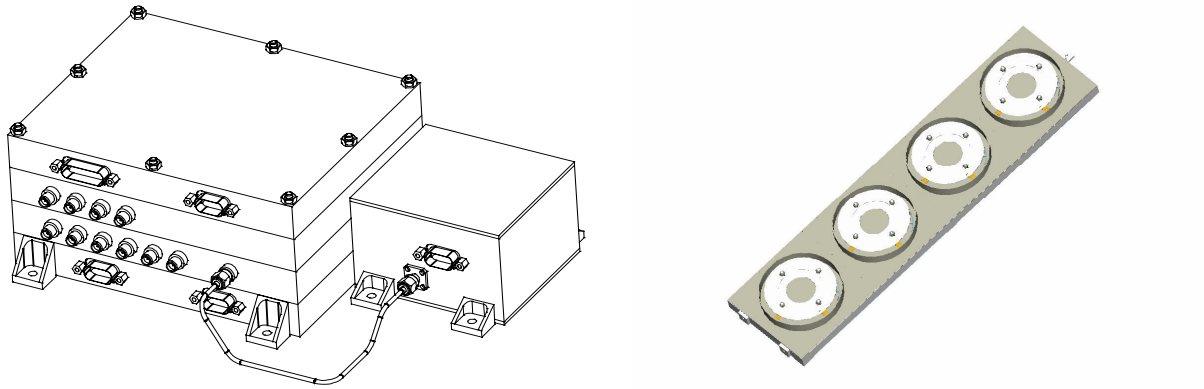

Figure 3-3: GRAS+ electronics unit, reference oscillator and occultation antenna

3.1.3 CALL

The CALL instrument has been analysed by SES in the WATS study for the Earth Explorer Core Mission. The receiver will amplify and down convert the signal to a suitable IF, which enables GRAS receiver technology to be reused. The carrier phase of the signal is detected and tracked in the same way as for GNSS occultations. Both the transmitter and the receiver should be phase locked to the GRAS+ reference oscillator. For transmission, the CALL signals are modulated digitally at IF. This frequency is generated from the GRAS+ oscillator. The signals are foreseen to be up-converted in two stages to the transmission frequencies.

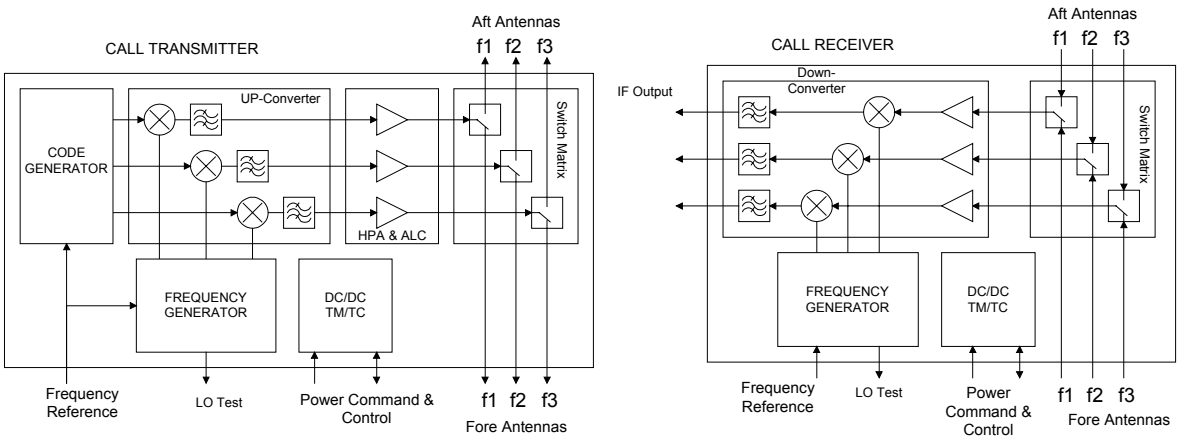

Figure 3-4: CALL transmitter and receiver functional block diagram.

Note that the IF output signal is fed into the GRAS+ instrument.

The antennas shall serve in either receive or transmit mode. Three frequency bands in the regions 10 GHz, 17 GHz and 23 GHz shall be served, with individual feed ports. Linearly polarised horn antennas are envisaged, one for the 10 GHz band and one combined antenna for the 17/23 GHz bands, the latter with orthogonal polarisations. A tentative design for conical circular horns is given in the table below. Alternative solutions can be considered, key requirement is the antenna peak gain.

Frequency	10	17	23	GHz
Wavelength	30	18	13	mm
Diameter	7.0	8.5	11.5	wl
	210	150	150	mm
Length	18	31	42	wl
	550	550	550	mm
Directivity	24.4	26.5	28.1	dBi

Table 3-1: CALL horn antenna parameters.

3.1.4 Instrument Budgets

A tentative CALL link budget is presented in the table below, based on the merged results from the two parallel WATS studies. The C/No figures are valid above the atmosphere i.e. without atmospheric attenuation or defocusing.

The expected stability of the receiver/transmitter is estimated to 0.01 dB/K each, in total 0.015 dB/K. This is based on in-house experience of receivers, and converters with and without thermal stability compensation. The temperature variation is estimated to 0.3 K/min maximum, rms <0.2 dB/min. This gives for 30 s occultation 0.002 dB, including some margin and indicating that we can reduce the requirement on S/C and Instrument thermal design and control.

Antenna gain can be controlled to an accuracy of 0.01 dB/antenna, total 0.015 dB/occultation, but can be improved e.g. by using S/C attitude control to track the transmitter/received beam at the peak of the antenna beam.

In total the Instrument can meet a total amplitude stability of 0.015 dB during one 30 second occultation. The major part of the amplitude variation will be linear, the non-linear part should be a magnitude smaller.

Frequency		10	17	23	GHz
Wavelength		29	18	13	mm
Free space att		-188.7	-193.1	-195.6	dB
TX Power [W]	2.0	33.0	33.0	33.0	dBm
TX gain		24.0	26.5	28.0	dBi
RX gain		24.0	26.5	28.0	dBi
Pre LNA losses		1.0	1.0	1.0	dB
Received power		-106.7	-106.1	-105.6	dBm
System noise temp		270	311	368	K
System noise temp		24.3	24.9	25.7	dBK
Bolzmann's const		-198.6	-198.6	-198.6	dBm/Hz/K
Noise power density		-174.3	-173.7	-172.9	dBHz
Implementation loss		-1.0	-1.0	-1.0	dB
C/No @ high altitude		66.6	66.6	66.3	dBHz

Table 3-2: Link budget for the LEO/LEO occultation link above the atmosphere

The instrument power and mass budgets are summarised in the Tables 3-3 and 3-4.

	GRAS+ CALL Receiver	GRAS+ CALL Transmitter	
Unit / sub-unit	**Value [W]**	**Value [W]**	**Remark**
GRAS+ Part	**27.0**	**21.2**	
CALL Part	**12.0**	**28.8**	Transmitter continuously operating
Total	**39.0**	**50.0**	

Table 3-3: Power budget for the instrument (GRAS+ and CALL) No redundancy included.

	GRAS+ CALL Receiver	GRAS+ CALL Transmitter	
Unit / sub-unit	**Value [kg]**	**Value [kg]**	**Remark**
GRAS+ Part	**8.3**	**7.8**	4 x 1 array for occultations
CALL Part	**9.2**	**9.1**	2 x 2 conical horns
Total	**17.5**	**16.9**	

Table 3-4: Mass budget for the instrument (GRAS+ and CALL). No redundancy included.

3.2 System Concept

3.2.1 Spacecraft

Several aspects drive the spacecraft design. First of all it is a platform for a payload with relatively high power consumption. Secondly, the pointing and stability requirements require a fully capable 3-axis attitude control system. Finally the mission should fit the cost envelope of the Earth Explorer Opportunity missions. It should therefore be a simple design and also fit a low cost launch vehicle.

This last aspect proved vital during the first design iterations. Taking the earlier studied ACE spacecraft with a baseline START-1 launch as starting point, it appeared that launch mass increased to the extent that the START-1 launch vehicle cannot launch into the high 900 km orbit. Cost considerations indicate to go for a mix of a START-1 launch for the low orbit and a Rockot for the high orbit. However, a complete Rockot launch would remove the need to optimise mass and volume. Increased cost of the two Rockot launches could be balanced against cost gains due to simplified design.

The following sections will first present the designs optimised for the START-1 launch and the Rockot launch. It then will proceed to give an overview of the general design, including the subsystems that are common to both options.

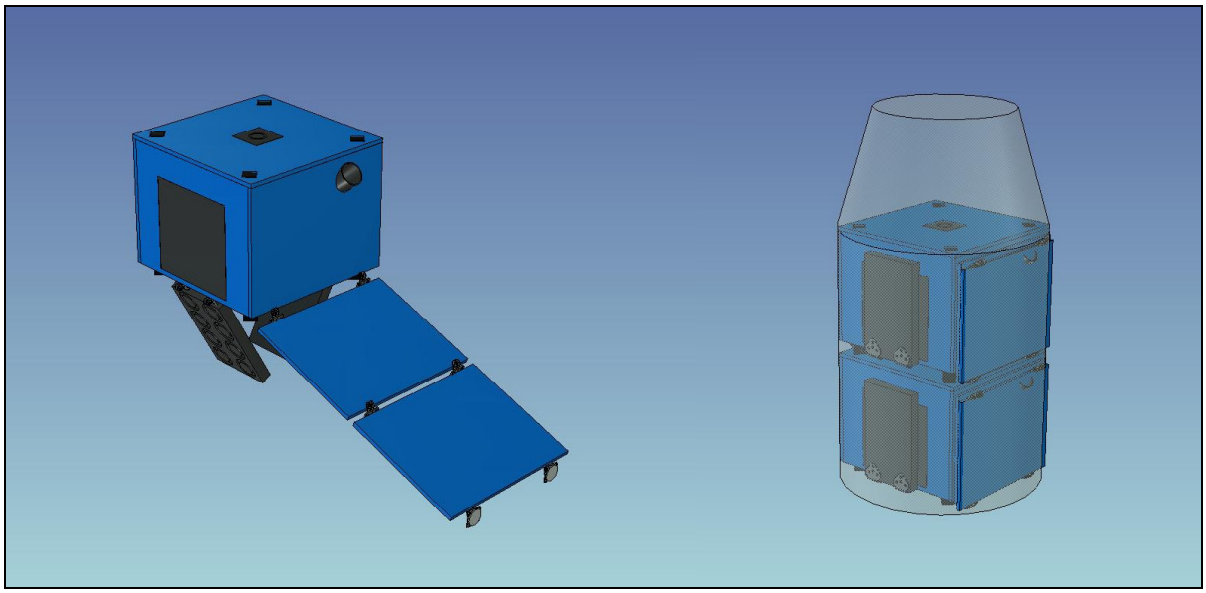

Figure 3-5: Configuration optimised for START

3.2.1.1 START-1 optimised configuration

The design problem focuses on fitting two spacecraft in available space and mass. For this solution a number of alternatives have been defined. The alternative based on the ACE configuration features stacking of the spacecraft during launch, and this facilitates launching one satellite (see option 1 in the launch vehicle description) because the centre of mass will stay on the launch vehicle centreline. A drawback is that both the solar panel and GRAS+ antennas have to be deployable. Other alternatives feature is a side-by-side launch, which offers less deployables, and thus a simpler system.
The table below shows a typical mass breakdown for the spacecraft, which meets the START-1 performance to launch in a 600 km orbit at 90° inclination.
The deployable solar panel at one side of the body needs a180° yaw manoeuvre each time the sun passes the orbit plane to keep the sun on the panel. The AOCS system is fully capable of performing this slew in a limited time frame.

Subsystem	Nominal mass [kg]	Average Contingency	Max. Mass [kg]
Power	13.8	18%	16.2
Radio	3.2	5%	3.4
Data handling	7.5	15%	8.6
Attitude Control	19.4	5%	20.3
Orbit Control	7.7	14%	8.8
Structure & Mechanisms	31.4	20%	37.6
Thermal Control	2.0	20%	2.4
Harness	10.0	35%	13.5
Platform mass	**122.0**	**17%**	**145**
GRAS+ payload	**14.1**	**20%**	**16.9**
Total S/C mass	**109.1**	**17%**	**127.7**

Table 3-5: Mass budget for the START-1 optimised spacecraft

3.2.1.2 Rockot optimised configuration

The figure below shows the configuration optimised for Rockot. It makes use of the volume available to have large, body-mounted Si solar panels, and also to have the GRAS+ antennas fixed to the body. This configuration should offer savings in terms of solar cell cost, mechanisms, and simplified AIV. A drawback is its size, which will make shipping and testing more difficult. The mass of one spacecraft is about 175 kg, well within the Rockot launch performance.

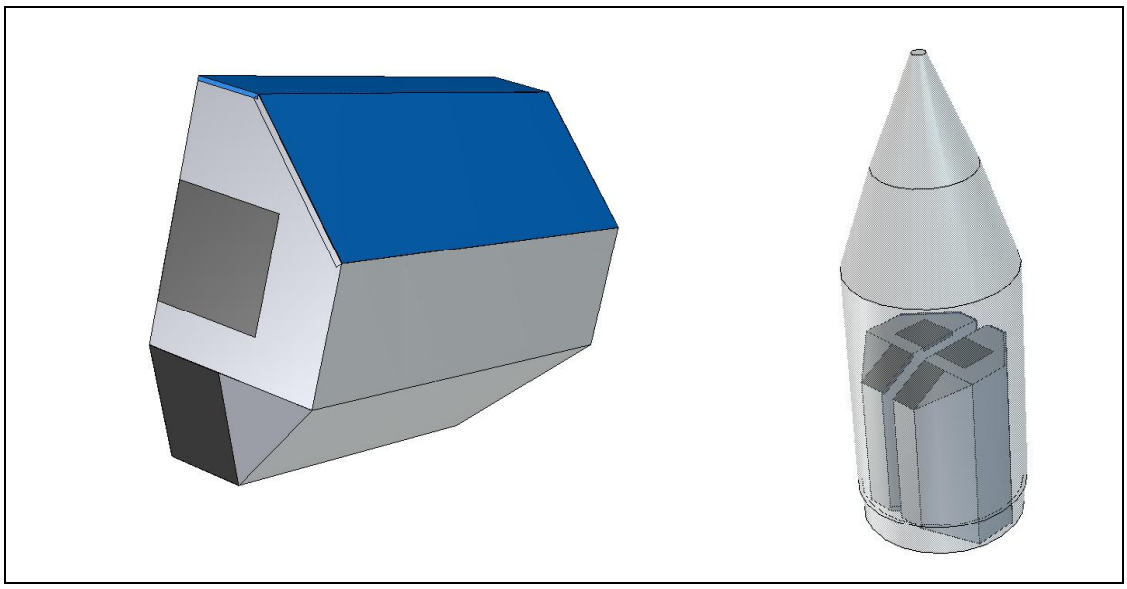

Figure 3-6: Configuration optimised for Rockot

3.2.1.3 General system layout and avionics

The figure below shows the general system concept for the spacecraft. A central role is played by avionics, which is called System Unit (SU) at SSC. The SU is based on SSC's Microsat Avionics Architecture (MAA) that was used for the ACE platform. This off-the-shelf concept has a strong heritage of the SMART-1 SU. The MAA consists of a number of loosely coupled boards (via the CAN bus) for processor, mass memory, TM/TC and interfaces to the other subsystems. This loose coupling of the boards is a strong advantage because it facilitates the early testing of board and interfaces. Simply plug in the CAN bus to a PC and start testing.
The spacecraft will basically be single string spacecraft, i.e. redundancy is only included for components and units that are less reliable. Two areas identified for redundancy are the reaction wheels and the separation command system. Although reaction wheels are not prone to fail, three reaction wheel have an increased chance of failing, and therefore a fourth wheel is an efficient means of increasing the reliability.

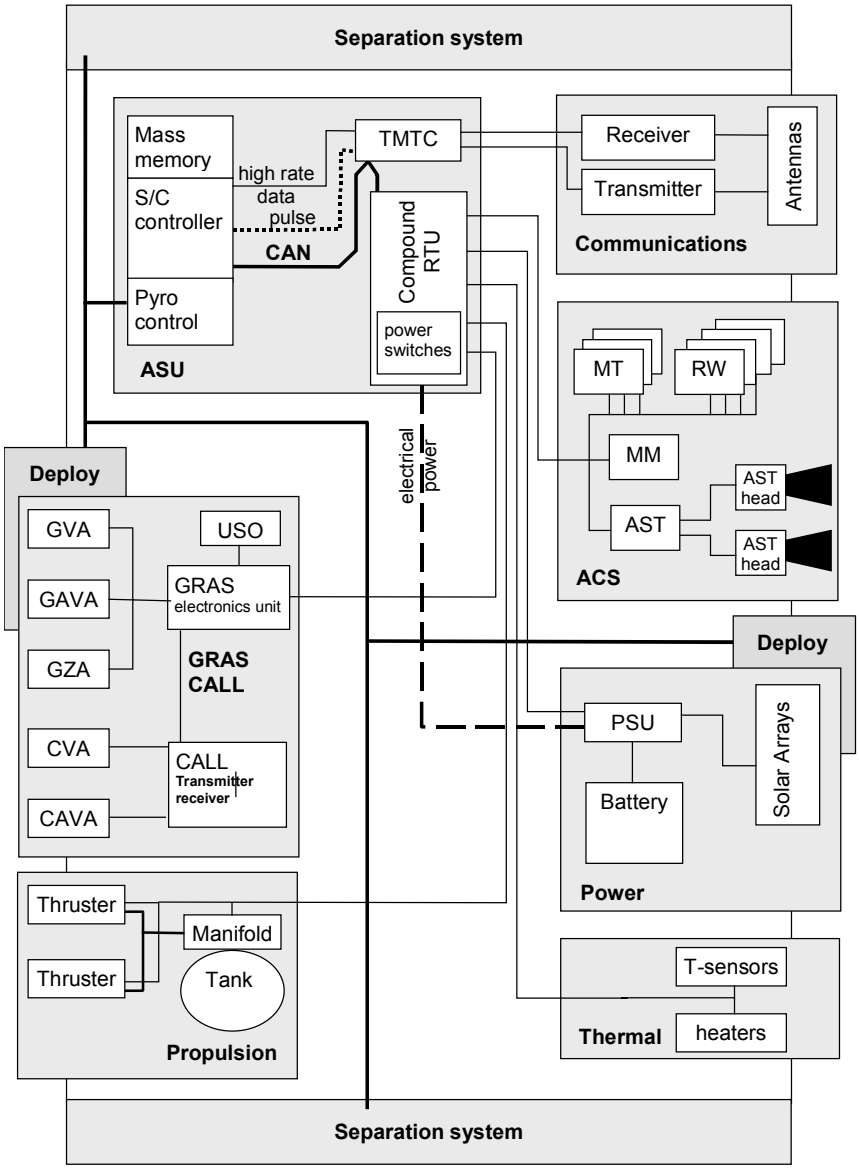

Figure 3-7: ACE+ system layout

3.2.1.4 Power system

The power system is designed for an orbit average power demand of about 77 W as specified below. The system for the START-1 alternatives is aimed at maximising power output and minimising mass. It employs triple/junction GaAs solar cells with a total of 2.2 m^2 installed, and a TBD Wh Li-Ion batteries. The power conditioning system uses the S^3R technique with constant solar panel bias voltage. This means that the full power is left on the panels. The power system for the Rockot configuration employs Si solar cells, and the other components will be optimised for cost.

	Power Nominal (W)	contingency	Maximum Power (W)	Orb. average Power (W)
Platform			56.4	**37.4**
Radio	16.9	5%	17.7	5.3
Datahandling	11.5	10%	12.7	12.7
Attitude control	11.4	14%	13.0	13.0
Thermal control	10	30%	13	6.5
Transmitting payload			52.2	**37.6**
Total transmitting			108.6	**75.1**
Receiving payload			39.7	**39.7**
Total receiving			96.2	**77.2**

Table 3-6: Power demand of the ACE+ spacecraft

3.2.1.5 Attitude and Orbit Control system

The AOCS is based on zero momentum system with four reaction wheels and an autonomous Star Tracker with dual optical head. This configuration meets the pointing and stability requirements of the payload with ease. Initial attitude acquisition and momentum dumping is done using three magnetic torquers and a magnetometer. A simple safe mode based on sun sensors, magnetometer, and magneto torquers is envisaged.
The orbit control system is used for initial phasing of the spacecraft in one orbit, and to synchronise the two orbit planes. The ACE study showed that a delta-V of 12 m/s is sufficient and therefore a simple cold gas system can be employed.

3.2.1.6 Communications

The communication subsystem is based on off-the-shelf S-band transmitters and receivers already identified during the ACE study. Furthermore it employs a straightforward switching scheme to low cost patch antennas.

3.2.1.7 Thermal control

Thermal control is aimed to be passive. However, experience from the ACE study, and the requirements for the GRAS/CALL instrument indicate that this area needs special attention during the coming phase. One advantage of the ACE+ spacecraft over the ACE spacecraft is increased mass and thus increased thermal inertia of the design.

3.2.2 Launch Vehicles

The ACE+ plus mission needs at least two launches, and therefore the launch is a driving force in the total system cost. Three options are defined that couple launch cost to system complexity. System complexity includes amongst others the complexity of the spacecraft (i.e. optimised or not) and the complexity of the launch vehicle interface. Increased system complexity will lead to increased system cost.
The launcher baseline consists of the START-1 launch vehicle marketed by Puskovie Uslugi, and recently used for the launch of SSC's Odin satellite, and the Rockot launch vehicle marketed by Eurockot. Both are low cost alternatives, but with very different performance. The START-1 launch vehicle can launch 260 kg in a circular 600 km, 90° inclination orbit. Rocket can launch over 1000 kg in a 900 km, 90° inclination orbit.

Finally a possibility exists to launch with the Long March 2C launch vehicle, which has a performance of 1500 kg in a 900 km, 90° inclination circular orbit.

3.2.2.1 Option 1 – START-1 launch

This option requires three launches, one for the injection of two satellites in the low (600 km) orbit, and two launches to inject two spacecraft, one at a time, in the high orbit. This option has the advantage that a common interface exists between the spacecraft and the launch vehicle, and that the spacecraft can be optimised for the launch vehicle. A drawback is the need for three launch campaigns, although a second launch campaign could contain the two single launches.

3.2.2.2 Option 2 – combined START-1 and Rockot launch

The START-1 injects the two spacecraft in the low orbit, and the Rockot the two in the high orbit. Drawback of this combination is increased complexity of having to work with two launch authorities, doubling some work. Impact on the mechanical interface is judged to be minor, because Rockot is flexible and can adapt to the START-1 interface. The spacecraft are optimised for START-1, which means Rockot has a huge over-performance. Offering piggy-back opportunities on the Rockot launch could decrease launch cost.

3.2.2.3 Option 3 – Rockot launch

Two launches will inject the spacecraft in the low and high orbits. This option has again the advantage of a common interface, but has the drawback of increased cost. Because Rockot offers so much mass and volume to the spacecraft, design can be optimised to cost, which means constructing it as simple as possible, i.e., fixed Si solar panels, fixed GRAS+ antennas, etc. The option of a Long March launch is similar to the all Rockot launch.
The table below compares the three options. All have their specific advantages and drawbacks, which should be the basis for a trade-off in the first phase of phase A.

	Option 1	Option 2	Option 3
L/V	START-1	START-1 + Rockot	Rockot Long March 2C
Number of launches	3	2	2
Advantages	Common interface Contingency capability (in case of launch failure)	Cost	Common interface Allows simple spacecraft design
Disadvantages	Optimised satellite (increased complexity) Increased launch campaign cost	Optimised satellite (increased complexity) Two launch vehicle interfaces	Higher launch cost (No launch cost in case of LM 2C)

Table 3-7: Launch option comparison for the ACE+ mission

3.2.3 Ground Segment

The ground segment is composed of two main facilities:

- Satellite Data Acquisition and Control network (SDAC)
- Data Processing and Mission Control Centre (DPMCC)

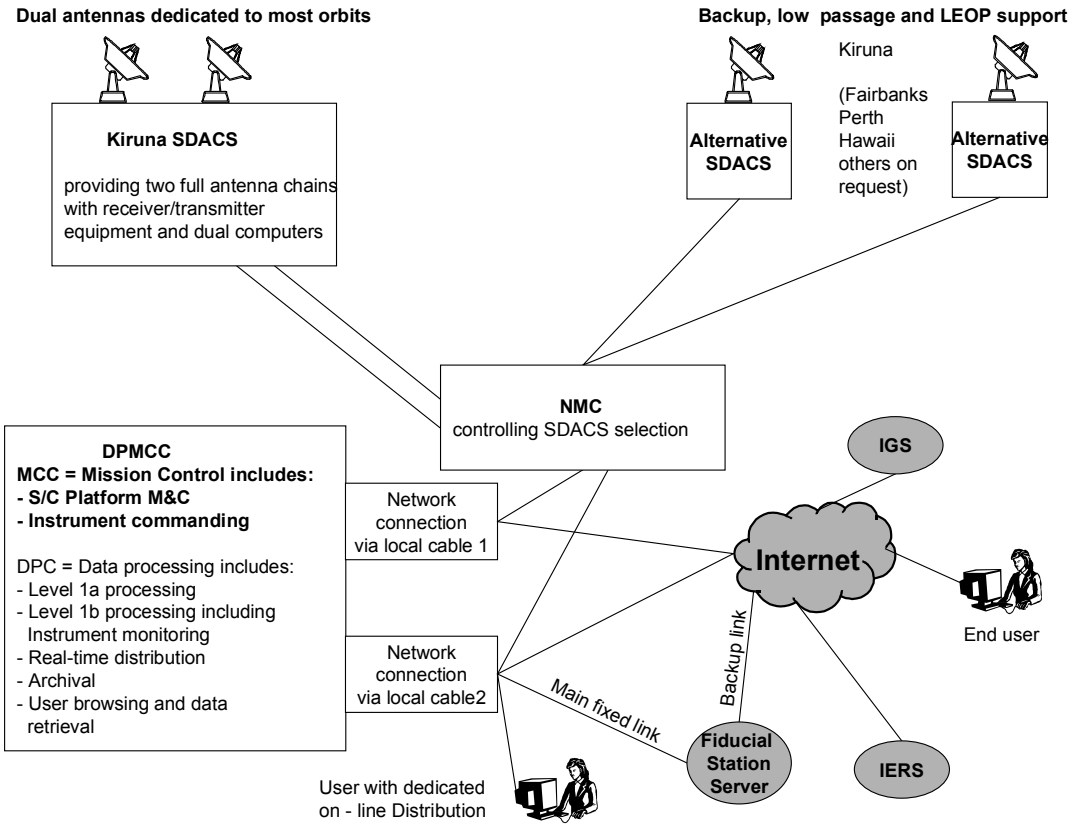

Figure 3-8: Ground Segment Overview

The SDAC consists of the main Satellite Data Acquisition and Control Station (main SDACS) and the Network Management Centre (NMC). All satellite commands and telemetry data are routed through the NMC that monitors and controls the telemetry and telecommand distribution network. All orbit data are forwarded from the MCC through the NMC that converts these to tracking co-ordinates. The NMC will manage the selection of alternative SDACS in case the main SDACS fails its mission. Alternative SDACS and/or backup antennas on the main SDACS are of particular importance during the LEOP where the tracking and control of closely positioned satellites may require additional antenna tracking and communication resources. There are 2 launches with 2 satellites launched, the two satellites in each launch having different S-band communication frequencies thus supporting the separation.

The baseline main SDACS is at Kiruna. Two 5 m S-band antennas are dedicated to the mission with one antenna providing backup and supporting simultaneous tracking and communication when necessary. With 90 degrees inclination of the orbits all orbits are visible from the Kiruna site but 3 orbits have a very low passage. These orbits are supported by additional 9 m antennas positioned in elevated positions thus providing for at least 4 minutes of tacking above one degree of horizon. As an alternative to the use of the 9 m antennas no efficient SDACS seems to be available presently at high latitude positions and separated about 90 degrees in longitude from Kiruna. An alternative main SDACS replacing Kiruna could, however, be Svalbard with the associated difficulties for high rate communication.

A maximum of 40 Mbytes of data dump per orbit from each of the 4 satellites leads to a dump rate of 1.3 Mbps over 4 minutes and an overall telemetry downlink rate of about 220 Kbps over 100 minutes (orbit time). This kind of telemetry downlink rate means storage of data at the SDACS or NMC to accommodate for the temporally non evenly arrival of satellites at the

SDACS. In order to speed up the downlink transfer rate and to allow backlog transfer at link switchover after failures we have selected a redundant 512 Kbps link. Thus in the worst case of simultaneous dump from two satellites the last telemetry arrives at the DPMCC no later than about 15 minutes after the beginning of the dump. 64 Kbps redundant uplinks are sufficient for the telecommanding.

The DPMCC is located in Copenhagen as a baseline. Alternatively the MCC may be placed at ESOC, Darmstadt. In the latter case the non-instrument related telemetry is stripped off at the NMC and forwarded to ESOC over existing links from Kiruna and the telecommand uplinks are likewise connecting ESOC over existing links to Kiruna. The same model will also apply if using Svalbard or any other facility as SDACS, the NMC still being at Kiruna. The DPC that is evaluating the instrument status will inform the MCC of any needs for commands through the internet with a dial up link as backup.

The DPMCC is characterised by an implementation whereby the processing platforms for the three main functional groups are kept separated. This allows for a simple and robust management of the adaptation to processing needs, of system availability, access safety, maintenance and even location as applicable. These three groups are:

- Mission Control (MC)
- Application Data Acquisition and Processing (ADAP)
- Data Distribution and Archiving (DDA)

The MC is based on SCOS 2000, a generic product developed - partly by Terma - through ESA. The MC will be configured to automated execution of satellite and ground segment commanding and the partly automated evaluation of the satellite housekeeping telemetry and the ground segment monitor information. The operator interface is highly configurable for tool-supported analysis of data. Standardised interfaces are provided to support mission planning and flight dynamics through command entry including uploading of new satellite software if necessary. SCOS 2000 supports operator manipulation of loaded commands and their execution.

Level 0 processing, i.e. check of telemetry frame quality and sequence consistency plus associated annotations, is performed at the SDACS.

Level 1a (data entry, validation and reformatting and storage for further processing) and level 1b data processing (GRAS+ bending angle profiles and CALL bending angle and absorption profiles, with associated supporting data) are performed by the ADAP. Instrument status monitoring as extracted from the telemetry or deduced from the further processing is performed as part of the level 1b handling and the MC is informed of any needs for commands.

The GRAS+ ADAP level 1 processing requires in addition to satellite data handling also the availability of data from ground based sources. Data are retrieved from the following sources:

- Servers providing continuous 1 Hz resolution GPS tracking data from fiducial tracking stations. These data are used for clock variation correction in occultation processing
- IGS servers providing GPS orbits plus 30 sec resolution continuous clock data from fiducial tracking stations for Precise Orbit Determination (POD) of the six LEO satellites
- Other servers providing infrequently updates of earth rotation data, etc.

The GRAS+ 1b occultation data processing consists of several steps. This includes corrections for satellite movement, cycle-slips, instrument and clock variations, multipath (in the lower troposphere) and ionospheric delay.

The GRAS+ near real time processing has been the subject of extended studies especially in the period since the ACE mission was selected as a standby mission during the first Earth Explorer Opportunity Mission selection. Important parts of the processing have thus been prototyped and the accuracy and processing speed mentioned below has been proven.

The POD is a prerequisite for the correction of satellite movement and has to be done with an accuracy of at least 0.1 mm/sec within the duration of an occultation (about 2 minutes). In view of the needs for fast processing this requires careful selection of POD methods (clock correction, dynamic orbit modelling and orbit integration). A dedicated LEO POD tool has been prototyped and tested for ACE based on the Bernese tool from AIUB in Bern.

Correction for LEO and GPS clock variation over the GRAS+ occultation duration is very critical. A unique clock extraction procedure has been developed. It exploits all the available tracking information - ground station and LEO GPS tracking at different data collection frequencies - and in addition provides an operational quality figure associated to the derived results as dependent on the quality of the tracking network available for the individual occultation.

The GRAS+ data processing system is designed to support the processing load associated with a satellite dump at least every 25 minutes in average. By implementing the system so that all processing associated to product generation resulting from one satellite data dump is performed within 25 minutes the required delivery times to end users (less than 2.5 hours from recording the data on board) may easily be supported. This allows as well for quite fair data transfer rates in the acquisition and delivery network. Flexibility must be provided to secure processing if data acquisition is delayed. All processing is controlled via a central database keeping track of the data availability and quality as a prerequisite for each new processing step.

Level 1b bending angle data are delivered on-line to users with operational needs, e.g. meteorologists for generation of level 2 data (temperature and pressure profiles), which may then be assimilated with NWP and Climate models.

Intermediate level 1a data from satellites and ground sources, orbit data and level 1b bending angle data are stored in archives with Web based near real time and off-line (one year or older data needing media insertion to jukeboxes) access via catalogues.

The satellite telemetry data associated to the CALL application will likewise be near real time processed at level 1a and level 1b. Instrument status monitoring is performed as part of the level 1b handling and the MC is informed of any needs for commands. Also the distribution and archiving is similar to the GRAS+ processing. The CALL processing algorithms are defined and have been subject to prototyping. Further optimisation is required in Phase A.

The ground segment has built-in redundancy and a high degree of automation based on local and system level failure contingency actions. This will secure an overall availability of system monitor and control, data acquisition, data processing and data delivery functions beyond 99.5 %, and loss of two consecutive satellite data dumps will never occur.

3.2.4 Operations

In the context of operations it is important to notice that the payload instruments are highly autonomous with on-board software controlling the operational modes, which apart from some initial power up sequences and failure mode procedures are closely associated to the individual occultation. The satellite platforms are autonomously three-axis stabilised. Orbit positioning correction activities are infrequent and primarily limited to the LEOP.

Monitor and control activities of the ground segment are highly automated, the degree of operator and specialist intervention, however, strongly dependent on the operational phase.

- *Normal operations*: 24 hours operator assistance is only required at the NMC and then normally only as a backup precaution (2 people) outside normal working hours. The operators may be shared with other missions served by the NMC. The SDACS are fully automated. At the DPMCC operator assistance is required only during daytime. Built-in redundancy results in the need for maintenance personnel only during daytimes at any part of the system.
- *LEOP*: There are two LEOP phases separated by a few months. The satellites are launched two in a bundle, then separated and slowly separated over some month using propulsion firing procedures which are not at all critical. During the first days of the LEOP there will be 24 hours operator assistance at the DPMCC.
- *Commissioning phase*: This is a long phase starting with the first launch and finalised some time after the second launch and LEOP. Basically the instruments need closer monitoring and may be associated with control involving science/instrument specialists available at the DP the first days after each LEOP. The final positioning of the satellites for best coverage is a long process over months with no need for specialists to be available on site normally, but rather at agreed meetings and on call at special events. The CALL application cannot be fully evaluated before the second launch has been executed. There is no need for 24 hours operator assistance throughout the commissioning phase, but the availability of an operator on call should be considered. The orbits can be observed quite well by the NMC operators that can, for example, assist in preparing emergency tracking co-ordinates in case of failures of the network connection to the MCC.

Ground segment platforms and network redundancy switching is automated, with maintenance personnel repairing faults during normal working hours only. Backlog processing in the context of redundancy switching – e.g., preventive storage plus repeated transmission after switching – is automated.

System platform (h/w and operating system plus network s/w) failures and degradation problems plus application s/w degradation problems (lack of resources, etc.) are flagged in the system log, on local terminals and remote terminals. In addition summary alarms may be issued that may be remotely available (e.g., SMS) in case of on call operators and maintenance personnel.

Monitor and control activities of the various parts of the ground segment are described below.

The tracking of spacecrafts, the handling of command uplink and telemetry dump is automatically controlled from the SDACS based on data forwarded well in time from the MCC and routed to the selected SDACS and antennas via the NMC. Orbital data from the MCC are in this process converted to tracking co-ordinates. The NMC operators may assist in the backup selection of alternative SDACS and in preparation of tracking co-ordinates based on known passages and radar information. The NMC will forward tracking reports, SDACS selection

reports and distribution link status reports to the MCC. The NMC monitors and controls all links to SDACS and DPMCC.

The MCC will perform the automated monitoring of the satellite platform status, orbit positions, the instruments status and the ground segment overall status.

- Orbit positions are received from the DPC as Precise Orbit Prediction is an integral part of the DPC level 1b processing
- Platform status is derived by the MCC from the telemetry
- Instrument status data are received from the DPC as derived here for tuning of processing parameters and data quality estimation
- The ground segment status data are based on data from the DPMCC processes and platform monitoring (operating system and network log) plus NMC reporting (tracking reports, SDACS selection reports and distribution link status reports).

The evaluation of monitored parameters is partly automated to the extent that critical parameters are checked and warnings are raised. Otherwise the operator is assisted by MCC provided evaluation tools.

The MCC provides tools for orbit prediction and commands preparation. Instrument commands may normally not be formulated - unless of routine nature - by MCC operators and must be co-ordinated with DPC specialists. Forwarding of commands and orbit data to the NMC is normally automatic.

The DPC performs automatically the Data processing, archiving and distribution for the standard data sets.

Evaluation of processing quality may require operator intervention through inspection of the log and (system assisted) display of selected data.

Operator assistance is required for removal and insertion of tapes in the archive jukebox, i.e., insertion of new tapes and transfer of tapes between off-line and near-online archive. The total amount of data to be archived will grow in the order of 5 TB per year.

Obviously collocation of MCC and DPC in a DPMCC may save operating personnel during normal operations.

3.3 Technological Complexity

3.3.1 Feasibility

The proposed mission is highly feasible. Not only is the scientific relevance well established, but also the technical approach is based on elements which all have a very sound technical basis.

The GRAS+ instrument is mature and application data processing well established.

The CALL instrument is based on known techniques: The receiver is closely related to the GRAS+ receiver (receiving a GNSS type of signals), some heritage exists from WATS pre-phase A studies (ESA, 2001), and high frequency transmitters have been produced before. The instrument and application processing algorithms have been studied and elaborated

within the WATS study for Earth Explorer Core Missions. Phase A activities shall expand the instrument and algorithmic basis needed.

3.3.2 Subsystem Maturity

The various constituents of the system are based on previous developments as illustrated in the description of section 3.4.

The GRAS+ instrument will be the instrument configuration currently under development for the METOP mission based on previous development within the EOPP framework. Acquisition of the GRAS+ scientific data will be made with observation techniques and instruments for which the underlying principles have already worked out, and for which preliminary experimental evidence have already been obtained in experiments done on European (ØRSTED, CHAMP) and American satellites (GPS/MET).

Processing of the GRAS+ data will be handled through the use of algorithms that are already developed, so that the scientific data will be useable from the very beginning of the operation of the satellites.

The prototyping of the CALL instrument and maturing of the processing algorithms for proper performance will be performed during phase A.

The technical implementation of the satellite platform and the ground segment is in general not particularly complex and critical.

The satellite weight, power and volume budgets are not critical for the launchers available and affordable. None of the various platform subsystems will be required to go beyond the present state-of-the-art in order to fulfil the scientific requirements for the mission.

For the ground segment performance tuning for GRAS+ application data has been already achieved.

The ground segment is planned implemented based on the SCOS 2000 control facilities that have already been demonstrated at ESOC for small scientific and meteorological missions. The extensions needed in order to monitor and control a constellation of satellites are not foreseen to be too complicated as the orbital monitor and control requirements are not particularly demanding and rather a question of separating the monitor and control database of the individual satellites.

3.3.3 Reuse of Elements

A considerable reuse of components, design and technology is foreseen. A more detailed review of the heritage of the various system elements is presented in section 3.5 below.

3.3.4 System and Instrument Heritage

The present section provides an overview of the way in which each of the mission elements derives its design or implementation from previous developments, either through heritage from design/concept or (assumed in addition) through COTS/Implemented availability (with assumed need for configuration).

Mission Element	New dev.	Design/ Concept	COTS/ Impl.	Company (Project/product)
Instruments				
CALL Subsystem	X			SES, Alcatel (WATS study)
CALL : Receiver after down conversion		X		SES (Metop/GRAS receiver)
CALL Antennas		X		Alcatel, SES
CALL Transmitters		X		Alcatel
GRAS+ receiver/subsystem		X X	 X	SES (EOPP develop-ments/studies, incl. ACE studies) SES (GPSOS Design specifica-tions) SES (Metop development)
Platform				
Data Handling System		X		SSC (Smart-1)
AOCS				SSC (Smart-1, Odin), Alcatel
Reaction wheels,			X	Teldix, Stork, IAI Tamam, Ithaco
Magnetic torquers			X	Zarm, Fokker Space, SSTL
Magnetometer			X	SSTL, IAI Tamam, Ithaco
Autonomous star tracker			X	Terma, DTU, Officine Galileo,
Sun sensors			X	TNO-TPD
Propulsion system		X	X	Bradford Engineering, Aerospa-tiale, IAI Rafael
Power system		X		Fokker Space
Solar panels			X	Fokker Space
Battery			X	AEA, SAFT
Power conditioning and distribution			X	Patria Finavitec
Communication		X		SSC
S-band transmitter/receiver			X	SSTL, QinetiQ, Alcatel, Alenia, Spacedev
RF antennas			X	SSTL, FFV
RF switches			X	DowKey
Structure and mechanisms			X	Fokker Space
Structure	X	X		Apco, Fokker Space
Mechanisms		X	X	Fokker Space
Separation system		X	X	Saab Ericsson Space, PyroAlli-ance
Thermal subsystem	X	X		Fokker Space
Ground Segment				
Ground Stations			X	SSC, ESOC (equipment commer-cially available, tracking networks available)
GRAS+ related Data Process-ing		X X	X X X	Terma (Developments for the ESA EOPP, study for ACE/POD, Clock extraction, processing framework) Terma, DMI, MetOffice (EU CLIMAP project/ using GPS/MET & ØRSTED occ. data) IGAM/UG, GFZ Potzdam, other European Institutes (using GPS/MET & CHAMP occ. data)

Mission Element	New dev.	Design/ Concept	COTS/ Impl.	Company (Project/product)
Instruments				
Mission Control Centre			X X X	Terma, ESOC (/SCOS2000) Terma/AIUB (/Precise Orbit Determination Tool) ESOC (/Flight dynamic support at ESOC)
CALL algorithms		X		Chalmers, DMI (WATS Study)
Satellite/Instrument & Ground Segment Testing				
EGSE		X	 X	SSC (SMART1) Terma/ESOC (/SCOS2000 with EGSE extensions)
AIV/AIT facilities				ESTEC, IABG, etc. (/Test facilities)
AIT Procedures				SSC, Terma, Fokker, SES, Alcatel (Science satellite projects)

Table 3-8: Subsystem, component and procedures heritage

3.4 Data Exploitation

The end users of the data and products will come from a variety of fields including public services, environmental protection, industrial users and International User Community interest groups, - although the initial focus will be scientific institutions.

Core users will exploit the Level 1b products delivered from the data processing centre in order to produce level 2 products and assimilate these with other data for climate change processing and NWP. The core users essentially are the participating partners and users (see section 5.3)

'Direct' users may receive level 1b, but most likely level 2 or higher level products for their monitoring and information services.

'Peripheral' users will in their protective strategies use results concerning long-term trends as derived by level 2 assimilation and trend analysis mainly performed by other institutes.

User Group	Core	Direct	Peripheral
Public Services			
Meteorological Institutes	X		
Climate Monitoring Institutes	X		
Natural Hazard Warning Services		X	X
Environmental Protection			
National Environmental Institutes		X	X
International User Community Groups			
WCRP	X	X	
GCOS	X	X	
IPCC			X

Table 3-9: User Group data Exploitation

The data policy tentatively adopted for the project would include:

- Free access to all data and products for the participating scientific partners
- Free access to generated products for the associated user institutes
- Free access to officially released products for other users via the Internet

4. Mission Elements and Associated Cost

4.1 Mission Costs

Mission element		Notes	Costs/ MEUR
Science preparation	Scientific definition studies	Primarily CALL and GRAS+ algorithmic analysis and improvement	2.0
	Campaigns	Involving climate and meteorology scientists in data usage	0.5
System level engineering and system level assembly, integration and test		This is the pure system level activity ensuring the end-to-end system functionality and quality. Instrument, Platform & Ground Segment covered below.	4.0
Space segment AIV included	Instruments: 4 GRAS+, 2 Rx's & 2 Tx's for CALL + Commissioning	Instruments integrated and tested and delivered fop S/C integration with support. Spares included.	30.0
	4 Platforms + commissioning	All integration and test included. Launcher fixation also. Including 2 MEUR for commissioning. Spares incl.	40.0
	2 or 3 Launchers + support	Launchers for lower and higher orbit plus preparation costs (1 MEUR)	21.0
Ground segment facilities AIV included	Command and acquisition stations with 5 years operations	Including all tracking and communication with LEOP and backup. 24 hours operator support. Spares included. This is a procured service.	3.0
	Operations centre with 5 years operations	Analysis, development/configuration & Integration/Test plus commissioning of e.g. SCOS2000 for 4 satellites. Spares included.	2.0
	Processing and archiving over 5 years of operations	Data processing Centre with analysis, development/configuration & Integration/Test plus commissioning. Spares included.	1.5
Mission control and Data exploitation	Mission Control over 5 years	Manpower over 5 years. Except LEOP and first phase commissioning normal working hours for operators.	1.2
	Data exploitation over 5 years	Manpower for the level 2 evaluation and algorithm maintenance.	1.2
Total			**106.4**

Table 4-1: Overall Mission Cost

4.2 Assumptions and Relations

Total mission cost will be covered including Phase A and all expenses for 5 years of operations. The project is assumed paid in total by the ESA Earth Explorer budget.
The proposed mission is self-contained with the partners described to the extent that no external dependencies are assumed except procurement. Chapter 5 explains the partnership and implementation approach. As an example of the procurement approach shall be mentioned the turnkey delivery of Command and Data Acquisition stations with 5 years operations including 24 hours operator support. The Network management Centre (Kiruna) and the backup tracking antennas are shared with other missions.
A variety of launching possibilities are available for the price given here (see chapter 3.2.2).

5. Implementation

5.1 Planning

5.1.1 Schedule

Below is inserted the pert diagram covering the phase A and the phase B/C/D/E work: Instrument, platform and ground segment development, launches and operational phases including commissioning.

Phase A is scheduled to last 1year. Phase B/C/D is planned to last 4 years: 1 year for EM, 1 year for PFM, 0.8 year for FM1 (refurbished PFM) and FM2, and 1.2 years for FM3 and FM4 (parallel to the first launch at start and including the second launch).

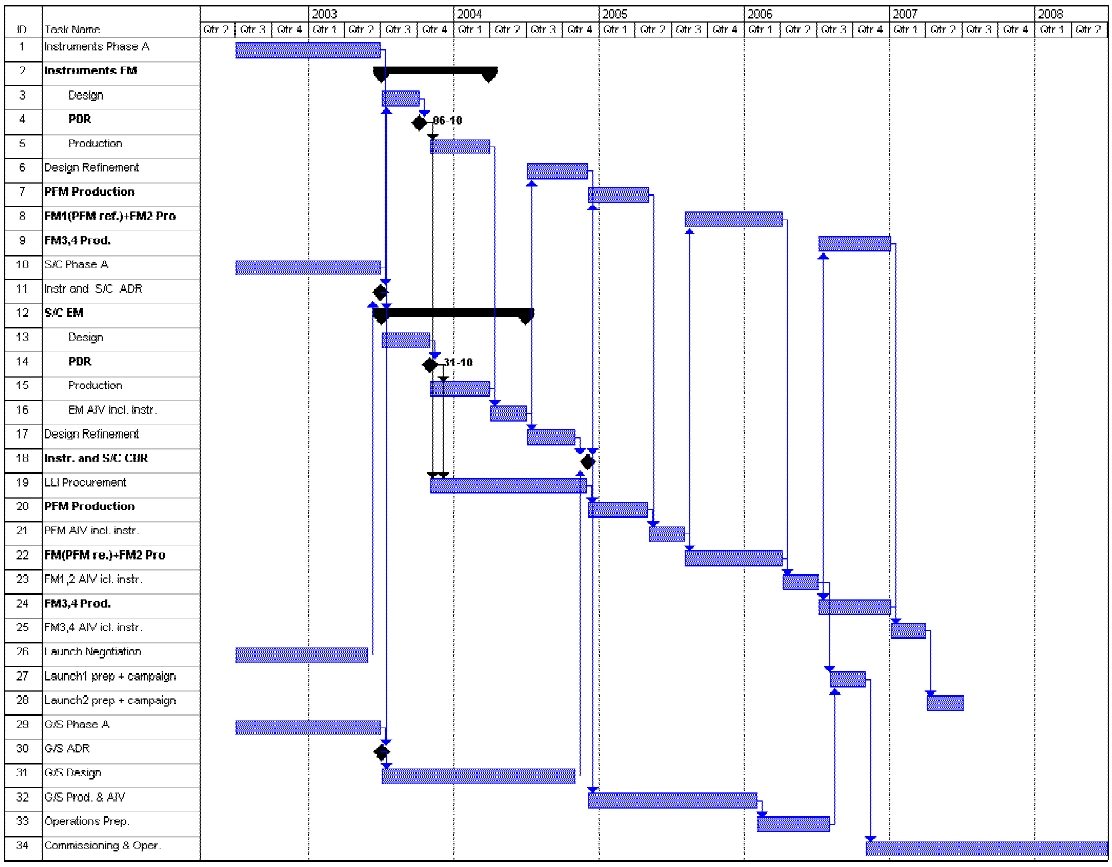

5.1.2 Critical Items and Activities

There are no severely critical items and activities.

The mission has a high level of redundancy as part of its basic concept, even though the individual instruments and platforms have little or no redundancy per se. There are two launches planned. There are 4 GRAS+ receivers planned to be in orbit at the same time, which will still generate a large volume data should one instrument or satellite fail to operate. There are two CALL receivers and two CALL transmitters in orbit at the same time, where just one receiver and transmitter would be sufficient to generate data of high scientific value.

A large set of COTS components has been included. Chapter 3.3 presents the feasibility, maturity and availability of the components and approach Timely development of the instruments is a prerequisite. The GRAS+ is not foreseen to be a problem as being an extension for

the GRAS instrument presently being developed for the Metop. The CALL has been studied in the WATS study (Earth Explorer Core Mission study). The instrument partly includes GRAS components and the front-end receiver, transmitter and antennas are based on well-known concepts and implementation experience. Considering the launchers available within the budget and the associated relatively low constraints on power, weight and volume there is no need for heavy optimisation to achieve transmitter stability, EMC immunity and other weight, volume and power demanding functions.

Implementation of the instruments, the platform and the various subsystems will follow a strategy of implementing an EM model, then a prototype flight model followed by the appropriate flight models. The prototype flight model will be refurbished to flight model one. A system simulator will be built based on the EM and an EGSE that is including the Mission Control Prototype system. Implementing the constellation in two steps will allow some last minute modifications to take place, should the in-flight evaluation of the first two satellites show a need to introduce some corrections.

The financial envelope is not foreseen to constitute a severe risk. Concerning cost versus quality the model philosophy is adapted to work allocation of the consortium partners to minimise interfaces and experience transfer (refer chapter 5.4.2, the EM and PFM manufacturers hands over FM production work to other partners together with a full EGSE and a simulator). The subsystem work including full AIV is distributed to teams monitored by a small and efficient consortium level engineering team.

5.2 Work Breakdown Structure

5.2.1 Project Phases and Interfaces

Phase A will terminate with a draft specification of the system and all subsystems. Considering the well-defined state of the mission, the Phase B is proposed included in the following Phase B/C/D/E. The consortium proposed for phase A is designed to be able to continue seamlessly to Phase B/C/D/E (team description and work allocation in chapter 5.4).

5.2.2 Model Approach

The model philosophy is selected so as to minimise project risk but at the same time make optimal use of the models established.

Phase B/C/D/E includes establishment and usage of the following models and equipment:

- Engineering Model (EM) for instruments, platform and ground segment, undergoing functional and EMC test
- Electrical Ground Support Equipment (EGSE) based on the prototype Mission Control Centre plus extensions
- System simulator based on the EM with s/w extensions
- Fitting model that allows trials on the mechanical fitting of subsystems and components
- Structure model
- Satellite Prototype flight Model (PFM) undergoing maximum vibration and maximum environment tests plus EMC test. It will be refurbished to a Flight Model (FM)
- Satellite FM's undergoing nominal vibration and environment tests

5.2.3 Phase-A Focal Activities

Refer 5.4.2 for the allocation of activities and mapping to partners. The following activities are in focus for the different segments:

Mission Segment	Focal Activities for Phase A
Overall Mission	• Satellite constellations for optimising coverage and revisit • Orbit LEOP and maintenance requirements • Overall planning for development, AIV, launch, commissioning and operations
Instruments	• Extend the CALL design, establish interfaces • GRAS+ update, establish interfaces • Budgets establishment (power, weight, volume) • Establish Draft Specifications • Planning the development and AIV for next phases • Check cost
Platforms	• Consolidate satellite design, subsystem and component selection • Budgets establishment (power, weight, volume) • Thermal analysis • Structural analysis • Establish Draft Specifications • Planning the development and AIV for next phases • Check costs
Launchers	• Checking launcher characteristics versus orbit and satellite weight • Checking integration of satellite (vibration, volume, fixation) • Contracting with launch company • Planning the launch, logistics
Ground Segment	• Develop CALL processing • Improve GRAS open loop processing • Define mission control and monitor requirements • Refurbish architecture from present • Establish performance and availability figures • Establish Draft Specifications • Planning the development and AIV for next phases • Check cost

Table 5-1: Focal Activities for Phase A

5.2.4 Phase-B/C/D/E Activities

Refer to 5.4.2 for the allocation of activities and mapping to partners.

5.3 Scientific Organisational Structure

5.3.1 Participating Institutions

The institutions and members of the science team, led by the proposers, are listed below.

Name	Institute	E-mail
Per Høeg **(Lead Member)**	AIR. Division Danish Meteorological Institute (DMI)	hoeg@dmi.dk
Gottfried Kirchengast **(Lead Member)**	Institute for Geophysics, Astrophysics, and Meteorology (IGAM) University of Graz (UG)	gottfried.kirchengast@uni-graz.at
Sylvia Barlag	Observations Research Division KNMI, P.O. Box 201	sylvia.barlag@knmi.nl
Stefan Bühler	Institute of Environmental Physics (IEP) University of Bremen (UB)	sbuehler@uni-bremen.de

Name	Institute	E-mail
Gunnar Elgered	Onsala Space Observatory Chalmers University of Technology	kge@oso.chalmers.se
Michael Gorbunov	Institute for Atmospheric Physics (IAP)	ldr@omega.ifaran.ru or gorbunov@dkrz.de
Alain Hauchcorne	Service d'Aéronomie (SA) du CNRS	alain.hauchecorne@aerov.jussieu.fr
Norbert Jakowski	Institut für Kommunikation und Navigation (IKN), Deutsches Zentrum für Luft- und Raumfahrt (DLR)	norbert.jakowski@dlr.de
Luis Kornblueh	Max-Planck-Institute for Meteorology (MPIM)	kornblueh@dkrz.de
David Offiler	NWP Satellite Applications The Met Office (MetOffice)	dave.offiler@metoffice.com
Antonio Rius	Institut d'Estudis Espacials de Catalunya (IEEC)	rius@ieec.fcr.es

Table 5-2: Institutes and representatives of the scientific organisation

Annex A provides a detailed description of the science team (section 6.1) as well as of the worldwide science user team assembled (section 6.2). The background information given there briefly addresses, for each institution, the interest in and foreseen contribution to the mission as well as experience and expertise. In addition, brief Curricula Vitae are provided for all team members. Phase A would be used to refine the envisaged contributions and roles of the team members and their institutions. Also, additional team members/institutions will still be welcomed to the team later if this is deemed sensible and helpful.

5.4 Industrial Organisational Structure and Responsibilities

5.4.1 Participating Companies

Consortium Structure

TERMA and SSC (Swedish Space Corporation) will be heading the mission level system engineering with SSC responsible for the platform design, EM and PFM development and TERMA responsible for the ground system development.

SSC will be assisted by TERMA, FOKKER, APCO, PATRIA (Finavitec) and possibly ALCATEL, concerning data handling, power system/solar-panels/mechanics, structure, power distribution/conditioning and AOCS, respectively. During the FM production and integration ALCATEL and/or FOKKER will take over the satellite work.

TERMA will be assisted by DMI and by IGAM/UG for the development of ground segment processing algorithms.

The Instrument development is the responsibility of SES (Saab-Ericsson Space) with ALCATEL as subsystem provider for the CALL instrument. SES is assisted by AAE (Austrian Aerospace) for the data processing.

A system level engineering team headed by TERMA and SSC will monitor the development throughout the project.

Annex A provides a detailed description of the participating companies.

Heritage

A core set of companies proposed has worked together during the ACE (standby Earth Explorer Opportunity Mission)/GRAS+ studies: TERMA, SSC, SES, FOKKER, DMI and IGAM/UG.

During the WATS (Earth Explorer Core) Mission study covering the CALL instrument and associated CALL/GRAS+ instrument the following companies were strongly involved: SES, ALCATEL, DMI and IGAM/UG.
AAE is involved as SES subcontractor in the Metop GRAS instrument. PATRIA and APCO are partners of TERMA and SSC in the context of other projects.

5.4.2 Distribution of Responsibilities

Key responsibilities within the industrial consortium are tentatively defined as in the table below. It displays the presently foreseen assignment of companies for the phase A and phase B/C/D/E. The Phase A work is further detailed in section 5.2.3.

Item	TERMA	SSC	SES	FOKKER	ALCATEL	PATRIA	APCO	AAE	DMI	IGAM/UG
Instrument										
Overall system engineering			X							
GRAS+ development & AIV			X							
CALL development & AIV			X		X					
Processing Algorithms			X					X		
Instruments overall AIV			X							
Platform										
Overall System Eng.		X								
Subsystems spec. & procurement in general		X	X							
Structure & structure analysis		X)	X)	X			X			
Mechanisms				X						
Launcher adaptation/separation			X	X)			X)			
Data Handling	X	X								
Communication		X								
AOCS		X			(X)					
Power System & Solar Panels				X						
Power Conditioning & Distribution						X				
Thermal control system				X						
Platform AIV:EM/PFM		X								
Platform AIV : FM's (may use test facilities elsewhere, e.g. Germany, ESTEC)				(X)	X					
Launcher (Russian, Russian/German, or Chinese provider): Definition and preparation		X								
Ground segment development										
Overall System Engineering	X									
Tracking Stations & TM&TC Communication as procured service		X								
Mission Control Centre (may be allocated to ESOC)	X									
Data Processing & Product Distribution, Development & AIV	X								X	X
Operations										
Tracking Stations & TM&TC Communication as procured service		X								
Mission control (may be allocated to ESOC)	X									
Data Processing & Distribution	X									

Assignment: X = Full Assignment, X) = Involvement through interface, (X) = Alternative

Table 5-3: Distribution of responsibilities within the industrial organisation

5.5 Project Management

The project management is distributed to three groups reflecting the responsibilities of the customer (ESA), the instrument developer and the overall system development.

Development Management Group	Functional Responsibility	Affiliation
Project Management (at ESTEC)	Project Scientist	UG (Note 1)
Instrument Management	Principal Investigator (PI) Technical Manager (TM) Data Processing Manager (DPM)	DMI (Note 2,3) SES (Note 3) DMI
System Management	Project Manager (PM) Spacecraft Manager (SCM) Ground Segment Manager (GSM)	TERMA (Note 3) SSC (Note 3) TERMA

Note 1: The University of Graz. Candidate proposed is G. Kirchengast
Note 2: The Danish Meteorological Institute. Candidate proposed is P. Høeg
Note 3: The PM, SCM's, instrument TM and PI are members of the industrial consortium Project Management Board

Table 5-4: Assignment of responsibilities for Project management

TERMA will establish a project office including representatives and office facilities in a near "on-site" company office at Leiden.

6. Annex

Annex Table of Contents

6.1 Science Team

6.1.1 Proposers of the Mission

Name:	Dr. Per Høeg
Affiliation:	Atmosphere Ionosphere Research Division (AIR) Danish Meteorological Institute (DMI)
Address:	Lyngbyvej 100 DK-2100 Copenhagen
Country:	Denmark
Telephone:	+45-39-157 486
Fax:	+45-39-157 460
E-mail:	hoeg@dmi.dk

Name:	Prof. Gottfried Kirchengast
Affiliation:	Institute for Geophysics, Astrophysics, and Meteorology (IGAM) University of Graz (UG)
Address:	Universitaetsplatz 5 A-8010 Graz
Country:	Austria
Telephone:	+43-316-380 5260
Fax:	+43-316-380 9825
E-mail:	gottfried.kirchengast@uni-graz.at

Below follows background information on the experience and expertise of the institutions and the proposers (CVs). Brief CVs of further key persons are also included.

A tight project structure between DMI, IGAM/UG and TERMA will ensure consistent management of the ACE+ project in accordance with the scientific objectives of the mission.

G. Kirchengast may take the ESTEC Project Scientist role.

An international industrial consortium, composed of the industrial primes TERMA, Swedish Space Corporation, Alcatel and Saab Ericsson Space, is foreseen to implement the complete system.

6.1.1.1 Danish Meteorological Institute (DMI)

General Background

DMI is the Danish national centre for operational meteorology, climate change monitoring and research of the atmosphere, covering the neutral processes in the lower troposphere/stratosphere region to the ionised physical phenomena in the ionosphere and magnetosphere. The main objectives of DMI are environmental survey and prediction in a general sense, i.e. surveillance, forecasting, and exploration of the whole atmosphere and the sea surface for the area including Denmark and Greenland. These activities cover data collection, data processing and distribution, product extraction and delivery, research and development in the fields of meteorology, climatology, hydrology, geomagnetism, upper atmosphere physics, space physics, and solar-terrestrial physics relations. The Research and Development Department of DMI has about 90 employees, which is organised in five divisions (Atmosphere Ionosphere Research Division, Meteorological and Oceanographic Research Division, Division for the Middle Atmosphere, and Solar-Terrestrial Physics Division). The key persons at DMI for this project come from the first four divisions of the Research and Development Department.

Extensive cooperation and coordination in the meteorological community for monitoring and assessing the global climate change aspects for the Earth is taking place through various international organisations and programs. DMI represents in this context Denmark in the international organisations:

WMO	World Meteorological Organisation, a specialised agency under UN
ECMWF	The European Centre for Medium Range Weather Forecasts
ESA	European Space Agency
EUMETSAT	The European Organisation for the Exploitation of Meteorological Satellites
IPCC	The Intergovernmental Panel on Climate Change (IPCC), established by WMO and UNEP (United Nations Environment Program)
ECSN	The European Climate Support Network

The Research and Development Department participates in several international and EC projects related to enhancing the use of NWP models and data products, especially in the context of the local area model HIRLAM (High Resolution Limited Area Model). DMI has been a participant in the HIRLAM project since the beginning in 1985. The objective is to develop a High Resolution Limited Area Model and required data assimilation systems for weather prediction and climate monitoring. During the last 5 years the HIRLAM system has been running operationally on DMI. The HIRHAM model is the climate version of HIRLAM.

The Research Department participates in several international climate-modelling activities via previous and presently running EC and Nordic projects. The reference climate models currently running at DMI are, the Arpege (climate version 1) GCM model (developed by the ECMWF and the CNRM in France) and the HIRHAM regional climate model, jointly developed by the MPI in Germany, KNMI in the Netherlands, and DMI.

Work is proceeding on the global climate models, with particular emphasis on extending the range of weather forecasts and evaluation of climate variability and future climate changes. The work on the climate models includes studies of the impact of selected physical processes on the stability of the climate system.

Use of operational satellite data has become a more and more vital part of the routine work of modern weather prediction services, and DMI has gradually developed skill and facilities, which made the institute today to the only fully operational satellite data centre in Denmark.

DMI participates in stratospheric ozone research through the major European research campaign THESEO, and earlier through the EASOE and SESAME campaigns, with the focus on spectroscopic measurements of ozone, other trace gases and polar stratospheric clouds. DMI hosts two of the primary stations within the international Network for the Detection of Stratospheric Change (NDSC) and is a Member of the NDSC Steering Committee. Dynamical modelling activities of stratospheric transport and microphysics of polar stratospheric cloud formation complement the mentioned experimental activities.

Space Experience

ØRSTED

DMI is in charge of the research program for the Danish satellite ØRSTED, launched in December 1998. The satellite will among other tasks perform GPS radio occultations to retrieve temperature profiles of the atmosphere (GPS Meteorology), as demonstrated by the US mission GPS/MET. Physical processes as internal waves, multipath phenomena and changes in the tropopause region of the atmosphere, related to weather and climate change monitoring, will be studied based on ØRSTED observations.

SAC-C

The satellite (launched in year 2000) orbits in a similar high inclination orbit as ØRSTED. It carries the next generation high precision GPS receiver from JPL for atmosphere limb soundings. DMI acts as Co-Investigator on this part of the mission, performing atmosphere profiles of the troposphere and the stratosphere together with electron density profiles of ionosphere. Apart from the retrieval of atmosphere temperature, pressure and water vapour profiles studies of the global electron density distribution will be done applying tomographic methods. Especially high latitude phenomena in the ionospheric electron density distribution will be studied in the auroral and polar cap region.

CHAMP

DMI participates in the mission (launched in year 2000) as Co-Investigator on the GPS atmosphere profiling mission of the satellite. The high precision GPS instrument onboard CHAMP is similar to the one on SAC-C. But the receiving antenna of CHAMP has a much higher gain than the equivalent antenna on SAC-C, making the mission especially suited for studies of variations in GPS signal strength and phase caused by phenomena in the atmosphere along the ray path. The open-loop mode of the GPS receiver makes it possible to describe regions of multipath, which can be associated with severe weather conditions and strong variations in humidity structures of the troposphere.

METOP/EPS

The same observational technique as proposed here is included in the ESA mission METOP/EPS in the EUMETSAT and ESA Earth Observation Programme. DMI is involved as scientific advisor and holds several contracts with ESA in the fields of GNSS atmosphere profiling. The studies addresses among other things, the influence of the ionosphere fluctuations on the accuracy of the temperature profiles, the usefulness of advanced Fresnel transforms and backward propagation techniques for GRAS data retrieval, the improvements in using tomographic presentations of the occultation data from low Earth orbiting satellites, and possible climate change fingerprints in the GRAS observations.

GPSOS/NPOESS

DMI performs together with Saab Ericsson Space, Austrian Aerospace, Terma, and U. of Leeds the Risk Reduction Phase for the GPS Occultation Sensor (GPSOS) selected to fly on the US NPOESS (National Polar-orbiting Operational Environmental Satellite System) series of polar orbiting satellites for weather monitoring. The missions are lead by the Integrated Programme Office (IPO), encompassing the institutions NOAA, NASA and the U.S. Air Force. Requirements setup by IPO for the GPSOS instrument are defined by an end-to-end evaluation of the level 2 data products. Thus the whole observational chain from measurements to the high-level user data products and total error budgets are assessed. The tasks encompass scientific studies as well as development activities. The latter cover, algorithm developments for the generation of the basic sounding products (bending angles, ionosphere electron density profiles, scintillations, and troposphere profile products (temperature, pressure and humidity)), error budget analysis related to the retrieval theory and noise term estimates (thermal, multipath, correction procedures for the experimental geometry, transmitter and receiver clocks, data retrieval statistical optimisation methods, and ionosphere corrections).

CLIMAP

The EU project CLIMAP is a pilot project studying the requirements for operational use of atmosphere profiling data in numerical weather forecasting and climate monitoring. In a pre-operational setup, applying observations from the satellites GPS/MET, ØRSTED, SUNSAT and SAC-C, the project will validate and assess the impact of the measurements for weather forecasting and climate monitoring together with the strategies required to effectively enhance the usefulness of the data. DMI is responsible for the data retrieval procedures and data assimilation's into weather prediction models.

FACE-IT

The mission FACE-IT (Field-Aligned Current Experiment in the Ionosphere and Thermosphere) is one of the four missions in phase A to follow the Danish satellite ØRSTED as the next national satellite mission. The main objective is to study the field-aligned currents in the ionosphere applying vector magnetometers and the new instrument named the 'Faraday Current Meter' (FCM), which directly measures the spatial fine structure field-aligned currents and their mapping to the magnetosphere. The observations from FCM and the magnetometers onboard FACE-IT will be used to develop a more detailed understanding of the interaction between the solar wind and the energy transfer processes to the magnetosphere-ionosphere system.

Further details on all DMI space activities and areas of research can be obtained from the DMI web site: http://www.dmi.dk.

Curriculum Vitae (CV) of Dr. Per Høeg

PROJECT: ACE+ Mission	**NATIONALITY:** Danish
NAME: Per Høeg	**INSTITUTION:** AIR Division Danish Meteorological Institute
BORN: 1949	

EDUCATION:

Ph.D. (Physics), University of Copenhagen, Denmark, 1987
M.Sc. (Geophysics), University of Copenhagen, Denmark, 1981

EXPERIENCE:

Currently	Head, Atmosphere Ionosphere Research Division (AIR), Research Department, DMI Senior Research Scientist, AIR Division, Research Department, DMI
1989-	• Senior Research Scientist
1994-1999	• External Associate Professor
1981-1989	• Research Scientist
1998-	Head, AIR Division, Research Department, DMI
1998-	Senior Research Scientist, AIR Division, DMI
1994-1999	External Associate Professor, Niels Bohr Institute, University of Copenhagen
1994-1998	Head, Remote Sensing Group, Solar-Terrestrial Physics Division, DMI
1989-1998	Senior Research Scientist, Solar-Terrestrial Physics Division, DMI
1986-1989	Research Scientist, Solar-Terrestrial Physics Division, DMI
1985-1986	Research Scientist, Danish Space Research Institute
1982-1985	Research Scientist, Max-Planck Institut für Aeronomie, Germany
1981-1982	Research Scientist, Danish Space Research Institute
1998-	Chairman, EUMETSAT GRAS Meteorology Satellite Application Facility (GRAS SAF)
1998-2002	Delegate, EUMETSAT Scientific and Technical Group (STG)
1996-	Member, ESA/EUMETSAT GRAS Science Advisory Group (GRAS SAG)
1996-1999	Member, Swedish National Science Foundation, Group 3 for Physics and Astronomy (NFR)
1996-	President, Danish National URSI Committee
1996-2001	Member, Board of the Danish Society for Physics, Section for Atom and Plasma Physics
1995-1999	Member, EUMETSAT Science Working Group (SWG)
1994-	Delegate, ESA Earth Observation Programme Board (PB-EO)
1994-1999	Member, ESA Earth Observation Data Operational Scientific Technical Advisory Group (DOSTAG)
1993-1999	Chairman, URSI Working Group for Advanced Usage of GPS/GLONASS Observations
1992-1994	Member, EISCAT Scientific Advisory Committee (EISCAT SAC)
1990-	Member, Danish National URSI Committee
1987	Visiting Research Fellow, Phillips Laboratory, Boston, USA
	Danish Scientific Primary Investigator on ØRSTED for the Atmosphere Profiling Mission Scientific Co-Investigator on SAC-C and CHAMP

LANGUAGES: Danish, English, and German

Curricula Vitae of H.-H. Benzon, A.S. Jensen, G.B. Larsen, K.B. Lauritsen, and A.S. Nielsen

Dr. Hans-Henrik Benzon *Born:* 08/06/1964 *Nationality:* Danish

1995	Ph.D., Denmarks Technical University, Lyngby, Denmark
1990	M.Sc., Denmarks Technical University, Lyngby, Denmark
1998–present	Senior Research Scientist, DMI, Copenhagen, Denmark
Experience and Expertise: Dr. Benzon has a background in optics and laser physics. He has worked on several research projects related to the GPS radio occultation technique, including projects as ACE (ESA), NPOESS (IPO/NASA/NOAA) and the GRAS Meteorology SAF (EUMETSAT).	

Dr. Arne Skov Jensen *Born:* 21/11/1944 *Nationality:* Danish

1976	Ph.D., Denmarks Technical University, Lyngby, Denmark
1972	M.Sc., Denmarks Technical University, Lyngby, Denmark
2000–present	Senior Research Scientist, DMI, Copenhagen, Denmark
1974–1998	Senior Research Scientist, Risø National Laboratory, Roskilde, Denmark
Experience and Expertise: Dr. Jensen has a background in coherent and incoherent optics, optical mapping and interconnects, statistical estimation theory, stochastic processes, optical turbulence, light scattering theory, interferometry, image recognition, and digital Fourier transformation. He is currently working on the ACE project for GPS atmosphere profile retrieval.	

Dr. Georg Bergeton Larsen *Born:* 11/12/1968 *Nationality:* Danish

1996	Ph.D., Aarhus University, Aarhus, Denmark
1994	M.Sc., Aarhus University, Aarhus, Denmark
1997–present	Senior Research Scientist, DMI, Copenhagen, Denmark
Experience and Expertise: Dr. Larsen has a background in astrophysics and cosmology. He is the Lead Scientist and Manager of the EUMETSAT GRAS Satellite Application Facility, located at DMI. Other scientific experiences are: GPS atmosphere retrieval theory, GPS radio occultation simulations, inversion theory, wave back-propagation, ionosphere physics and scintillations.	

Dr. Kent Bækgaard Lauritsen *Born:* 07/08/1965 *Nationality:* Danish

1995	Ph.D., Aarhus University, Aarhus, Denmark
1991	M.Sc., Aarhus University, Aarhus, Denmark
1999–present	Senior Research Scientist, DMI, Copenhagen, Denmark
1997–1999	Research Scientist, Niels Bohr Institute, Copenhagen, Denmark
1995–1997	Research Scientist, Boston University, Boston, U.S.A.
Experience and Expertise: Dr. Lauritsen has a background in theoretical turbulence in gasses and materials. Since 1999 he is the scientific lead for the retrieval algorithms for the EUMETSAT GRAS Satellite Application Facility, located at DMI. Other scientific experiences are: Measurements of atmospheric parameters with GPS radio signals, inverse transform theory, back-propagation, wavelets, theoretical statistical physics, dynamics and scaling of interfaces, renormalization group methods, statistical mechanics of non-equilibrium systems, self-organized criticality and avalanche dynamics, disordered systems, and Monte Carlo simulations.	

Dr. Alan Steen Nielsen *Born:* 29/09/1968 *Nationality:* Danish

2000	Ph.D., University of Copenhagen, Copenhagen, Denmark
1996	M.Sc., University of Copenhagen, Copenhagen, Denmark
2001–present	Research Scientist, DMI, Copenhagen, Denmark
Experience and Expertise: Dr. Nielsen has a background in optical- and radio astrophysics. He is currently working on the subject of space-borne atmospheric soundings in general and in particular the ACE project for GPS atmosphere profile retrieval selected in the ESA Earth Observation Opportunity Mission Programme.	

6.1.1.2 Institute for Geophysics, Astrophysics, and Meteorology, University of Graz (IGAM/UG)

General Information

The Institute for Geophysics, Astrophysics, and Meteorology (IGAM) of the University of Graz (UG) is Austria's leading Institute in the fields of atmospheric remote sensing, atmospheric and climate physics, solar physics, and solar-terrestrial science. It is the successor of the former Institute for Meteorology and Geophysics (IMG), founded by Heinz von Ficker and Alfred Wegener early this century, and the former Institute for Astronomy (IfA). The two smaller Institutes joined forces in 1999 and merged into the IGAM in order to best exploit the synergies between the Earth, atmosphere, and space science activities in the IMG part and the solar, heliospheric, and solar-terrestrial science activities in the IfA part, respectively. IGAM staff (including Ph.D. posts) comprises currently about 40 people, the majority being highly qualified scientists.

The IGAM — part of UG's Natural Sciences Faculty hosting ~6000 students (UG total: ~30.000 students) — has available all competence, infrastructure, and facilities to ensure a successful implementation of its scientific leadership role, as a partner of DMI, in the ACE+ mission. To mention (as an example) one aspect of infrastructure, the UG owns a world-class library, of which the IGAM hosts the comprehensive book and journal stock related to all theoretical, computational, and experimental fields of meteorology, geophysics, space physics, astrophysics, and the environmental sciences. On facilities, the excellent computer, network, and telecommunications equipment shall be mentioned. IGAM/UG's mission project team will have full access to all these resources of IGAM and the University.

Competence, Experience, and Scientific Excellence

Regarding competence, the IGAM stands, with its Atmospheric Remote Sensing and Climate System (ARSCliSys) Research Group led by Prof. G. Kirchengast, among the European pioneers and world-wide scientific leaders in the field of radio occultation science. The ARSCliSys group is leading, as well as involved in, many major international activities in this field, which lies at the core of the proposed mission. As an example, one key achievement of the ARSCliSys group related to the proposed mission is its engagement in leading the development of the End-to-end GNSS Occultation Simulator (EGOPS) software tool; a development performed under ESA contracts as a Europe-wide effort, which involves besides IGAM the proposal partners DMI, Met Office, TERMA, and a series of other European institutions.

Further spaceborne atmospheric sounding research lines actively pursued by the group include occultation techniques complementary to GNSS-LEO and LEO-LEO radio occultation (stellar and solar occultation) as well as high-resolution spectroradiometric IR and MW sounding. Climate system research topics of key interest include the analysis of naturally and anthropogenically influenced change in the atmosphere's thermal, moisture, and ozone structure (from intra- and interannual variability to interdecadal trends), improvement of climate models and their forcing inputs via global observational constraints, and climate change detection and attribution. Methodological interests behind include advanced physical and statistical modeling and innovative utilization of inverse theory, empirical regression theory, and data fusion/assimilation theory.

More detailed information on the group's activities can be found at the ARSCliSys website: http://www.uni-graz.at/igam-arsclisys.

Scope of Background Expertise

In addition to the ARSCliSys group, there are further research groups at IGAM/UG, which are relevant in the context of this proposal as they re-enforce the atmosphere and space science competence indicated and are prepared to provide additional contributions as well as fringe know-how to the proposed work as required. These deal with upper atmosphere and ionosphere physics (group led by Prof. R. Leitinger, currently Head of IGAM/UG), atmospheric trace gases, aerosols and radiation (led by Dr. E. Putz), and solar system physics and Sun-Earth relations (led by Prof. A. Hanslmeier), respectively. This indicates that research activities and experience at IGAM/UG cover the whole atmosphere from the troposphere to the upper atmosphere as well as space from near-Earth space to the boundaries of the heliosphere. The broad spectrum of competence is also reflected in the teaching activities of IGAM/UG, which cover the full curricula of geophysics, astronomy, and meteorology, respectively, and contribute to the curricula of experimental, theoretical, and computational physics as well as environmental system sciences.

Further Information on IGAM/UG

More detailed information on IGAM can be found at the website http://www.uni-graz.at/igam, and more information about the University of Graz at the website http://www.uni-graz.at, respectively.

Readiness for the ACE+ Mission

The IGAM/UG and its Atmospheric Remote Sensing and Climate System Research Group are fully prepared to support G. Kirchengast – see CV below – in all respects required to ensure successful leadership, together with P. Høeg, of the proposed mission as well as successful conduction of the foreseen scientific contributions.

Besides leadership service by G. Kirchengast, the IGAM/UG contributions will in particular include — among a series of research projects on advancing GNSS-LEO and LEO-LEO retrieval performance for climate use and on climate Observing System Simulation Experiments (OSSEs) — the setup of a European Climate Monitoring and Analysis Center at IGAM. This Center is foreseen to conduct research and to provide user services on occultation-derived global climatology products for key climate variables such as temperature, water vapor, and geopotential height. This Center will be one of the main ACE+ level >2 product centers, providing the user community with climate-optimised level 2 data ("level 2+") as well as climate level 3 data (occultation-based global month-to-month, season-to-season, and year-to-year climatologies). See Section 5 for further information on the role of IGAM/UG.
Key staff at IGAM co-leading all these research and development activities will include Dr. U. Foelsche, Dr. A. Steiner, and Dr. J. Ramsauer (see brief CVs after G. Kirchengast CV).

Furthermore, the Ionosphere and Upper Atmosphere (IUAR) Research Group led by Prof. R. Leitinger has a strong interest to exploit the unprecedented spin-off value of the ACE+ mission for ionospheric research, both from LEO-LEO and GNSS-LEO measurements. Main interests include derivation of 2D/3D electron density distributions for geophysical and applicational purposes and improvement of ionospheric models for enabling, in turn, improved estimation of residual ionospheric influences on transionospheric radio propagation, relevant for many applications also beyond geophysics, e.g., for geodesy and satellite communications. A brief CV of R. Leitinger, one of the leading experts in this field, is enclosed.

Curriculum Vitae (CV) of Prof. Gottfried Kirchengast

PROJECT: ACE+ Mission	**NATIONALITY:** Austrian
NAME: Gottfried Kirchengast	**INSTITUTION:** IGAM/UG
BORN: July 14, 1965	

EDUCATION:

University of Graz, Austria (Studies 1984–1991).
1st diploma (B.Sc. level) in Physics, Meteorology, and Geophysics, 1986; 2nd diploma (M.Sc. degree, with highest honors) in Geophysics, 1988; Dr.rer.nat. (Ph.D. degree, with highest honors) in the Natural Sciences/Geophysics, 1992; 2nd diploma (M.Sc. level, with highest honors) in Physics, 1995.

EXPERIENCE: (*for detailed information see* http://www.uni-graz.at/gottfried.kirchengast)

1992–present **Professional Development.** Assistant professorship University of Graz (1992), Max-Planck post-doc fellow at MPI for Aeronomy, Lindau/Harz, Germany (summers 1992–1994), Foundation/Direction of the ARSCliSys Research Group at IGAM/UG (1995–), Venia docendi Geophysics (1997), Appointed associate professor (1997), Visiting scientist at MPI for Meteorology, Hamburg (summer 1998), Awarded with the "START Preis 1998" for basic research on "Advanced Spaceborne Sounding and Climate Modeling for Atmospheric Change Analysis" (1998) ["START" and "Wittgenstein" prizes, the prize-winners being selected by an esteemed international Jury after stringent peer review, are Austria's most prestigeous and best endowed discretionary research fund awards], Awarded with the "Josef-Krainer Würdigungspreis 1999" for exceptional performance in the field of Meteorology and Geophysics (1999), Visiting scientist at Univ. Corporation/ Nat.Center for Atmos. Research, Boulder, USA (summer 1999), Visiting scientist at MPI for Meteorology, Hamburg (summer 2000), Visiting scientist at Inst. of Atmospheric Physics, Univ. of Arizona, Tucson, USA (summer 2001).

1988–present ***Research.*** Since 1996 focus on atmospheric remote sensing and use of spaceborne sounder data for climate and weather studies. Interests include occultation methods for active limb sounding (GNSS radio occultation, but also stellar, solar, and LEO cross-link occultation) and spectroradiometric methods for passive IR and MW sounding; climate and weather interests include the analysis of changes in the atmosphere's thermal, moisture, and ozone structure, improvement of climate modeling by observational constraints, and climate change detection and attribution; methodological interests include advanced physical and statistical modeling, inverse theory, empirical regression theory, and data fusion/assimi-lation theory for optimal estimation of key parameters of complex systems (e.g., the atmosphere) from indirect measurements. Author/Co-author of ~40 international papers/reports in this field. Since 1988, with focus until 1995, research on the physics of the upper atmosphere including on thermosphere-ionosphere interactions, high-resolution ionospheric weather modeling, 3D modeling of the ionosphere-plasmasphere system, ionospheric tomography. Author/Co-author of ~20 international papers/reports in this field.

1992–present ***Teaching.*** Delivering university lectures, seminars, and privatissima on many topics of geophysics, meteorology, physics, and environmental systems sciences. Supervision of M.Sc. and Ph.D. students on a wide variety of topics (currently 2 M.Sc. and 7 Ph.D. students).

1994–present ***Management.*** Head of the ARSCliSys Research Group (~10 scientists), Director of the International EGOPS Maintenance Center (IEMC), 2nd Deputy Head of IGAM, Chairman of the Commission for Meteorology and Geophysics Studies, Director/Manager of a series of international research programmes and projects or of IGAM's participation in them.

1992–present ***International Services.*** Member of many international scientific societies, bodies and panels including the ESA/EUMETSAT "GNSS Receiver for Atmospheric Sounding Science Advisory Group". Reviewer, consultant, etc., in many international contexts/projects.

LANGUAGES: German, English, some French

Curricula Vitae of U. Foelsche, A. Steiner, J. Ramsauer, and R. Leitinger

Dr. Ulrich Foelsche

Born: 10/05/1968 *Nationality:* Austrian

1990	1st diploma (B.Sc. level), Meteorology and Geophysics, Univ. of Graz, Austria
1995	M.Sc. Geophysics, Univ. of Graz
1999	Ph.D. Natural Sciences (Meteorology and Geophysics), Univ. of Graz
1999–present	Post Doctoral Scientist, ARSCliSys Research Group, IGAM/UG, Graz

Experience and Expertise: Starting out with research in past climates with focus on abrupt temperature changes in his M.Sc. thesis, Dr. Foelsche's Ph.D. thesis and post-doctoral work focused on atmospheric sounding using GNSS signals. He has developed a system for tropospheric water vapour tomography via combined use of ground-based and spaceborne GPS data and is currently involved in a co-lead role in a climate OSSE study investigating the temperature trend detection capability of a GNSS occultation observing system over the coming two decades. His experience also covers both theoretical and empirical error analysis methodologies and expert know-how on the EGOPS S/W system. Besides research, he is a lecturer at UG on advanced data analysis and climate science topics.

Languages: German, English, French, some Spanish

Dr. Andrea Steiner

Born: 08/05/1965 *Nationality:* Austrian

1991	1st diploma (B.Sc. level), Meteorology and Geophysics, Univ. of Graz, Austria
1995	M.Sc. Geophysics, Univ. of Graz
1997	Biosphere 2 Earth Semester Program "Global Change", Biosphere 2 Center, Arizona, U.S.A.
1998	Ph.D. Natural Sciences (Meteorology and Geophysics), Univ. of Graz
1999–present	Post Doctoral Scientist, ARSCliSys Research Group, IGAM/UG, Graz

Experience and Expertise: Dr. Steiner's M.Sc. thesis focused on temperature inversions and their effect on air pollution. She then started to gain radio occultation experience already in 1995. Her Ph.D. thesis dealt with GNSS-LEO radio occultation, specifically the retrieval of key climate variables, error analysis and validation of GPS/MET data, and utilization of GPS/MET data for studying gravity wave activity. In her semester at the Biosphere 2 Center (1997), she worked on carbon dioxide changes and their effects in Biosphere 2. Dr. Steiner has significantly contributed to scientific algorithms of the EGOPS S/W and has acquired extensive EGOPS expertise in course of her work. Currently she is involved in a co-lead role in a climate OSSE study investigating the temperature trend detection capability of a GNSS occultation observing system until 2025. Furthermore, she currently performs a rigorous end-to-end retrieval performance analysis (biases, standard deviations, error correlation functions) for GNSS occultation data products.

Languages: German, English

Dr. Josef Ramsauer

Born: 01/04/1959 *Nationality:* Austrian

1982/ 1988	1st diploma (B.Sc. level)/ M.Sc. degree, Physics, University of Graz, Austria
1994	Ph.D. Natural Sciences, Astronomy, Univ. of Graz (A)/ ETH Zurich (CH)
1994–1995	Post Doc Scientist at the Institute for Astronomy, Univ. of Graz
1996–present	R&D Scientist, ARSCliSys Research Group, IGAM/UG, Graz

Experience and Expertise: Dr. Ramsauer has a wide scientific background expertise ranging from theoretical physics (particle physics) and astrophysics (solar physics) via celestial and orbital mechanics and satellite mission analysis to radio occultation science. He also has rich experience in S/W development, especially in Fortran, IDL, and Focal programming, as well as with Unix, Linux, DEC/VMS, and Windows operating systems. He is responsible for the management and maintenance of the software pool of the ARSCliSys Research Group and member of the EGOPS S/W core development team as well as its lead test engineer. Furthermore, he is Assistant Manager of the International EGOPS Maintenance Center (IEMC) at IGAM/UG.

Languages: German, English, some Spanish

Prof. Reinhart Leitinger

Born: 07/01/1940 *Nationality:* Austrian

1965	Dr.phil. at University of Graz, Austria
1971	Habilitation (venia docendi) for Geophysics at Univ. of Graz
1983/84	Senior Research Associate at AFGL (now Phillips Labs), Cambridge, MA, U.S.A.
1993	Title of University Professor
1965–present	(with „on leave" interruptions) researcher and Univ. teacher at University of Graz, present position corresponds to "Associate Professor with tenure". Presently Head of IGAM/UG.

Experience and Expertise: Leader of earth ionosphere research at the Insitute since 1981 (responsible for electron content data collection and investigations of long-term effects since 1965). Chariman of the international Beacon Satellite Group since 1971 (presently Working Group of URSI Comm. G). Member of the ESA Ionosphere Expert Team for EGNOS and GALILEO. Leader of Working Group 2 of the COST Action 271. Adviser of M.Sc. and Ph.D. theses with ionosphere/upper atmosphere research relevance.

Languages: German, English, French

6.1.2 Science Team Overview

The scientific team behind the ACE+ mission has been organized in a twofold structure:

- A *Science Team*, which comprises scientific partners forming the core scientific team of the ACE+ mission. They are prepared to play an active role in the detailed formulation of scientific requirements and science plans, in preparatory studies, in developing scientific algorithms, in providing value-added products, in validation, and so on.
- A *Science User Team*, which comprises scientific partners forming the core scientific user community for ACE+ data. These partners, most of them non-European ones, have expressed dedicated interest in ACE+ and are prepared to exploit the data in a variety of ways. Several of them are also interested to actively contribute to preparatory work.

In this section, 6.1, information on the *Science Team* is given; the following subsection, 6.1.3, provides details on all members. The Science User Team is introduced in section 6.2.

6.1.3 Science Team Members

The ACE+ Science Team is led by P. Høeg (DMI, Denmark) and G. Kirchengast (IGAM/UG, Austria) and is composed of a range of international partners. Besides DMI and IGAM/UG, the research institutions include: KNMI, Netherlands, IEP/UB, Germany, Chalmers, Sweden, IAP, Russia, SA/CNRS, France, IKN/DLR and MPIM, Germany, UKMO, U.K., and IEEC, Spain (Table 6.1, next page, explains the acronyms).

The Science Team members (in total 11, see Table 6.1) all bring in broad and internationally recognized expertise in different areas of radio occultation methodology and in different fields of ACE+ exploitation, e.g., climate, NWP, atmospheric physics, and space weather. Furthermore, each member represents – and is backed up by – his/her group and whole institution. In most cases, dedicated local teams of associated members have been formed already now, prepared to support ACE+ mission work (see subsection 6.1.3 below).

Following Table 6.1, more detailed background information is given for each institution and member involved (except for the lead members P. Høeg and G. Kirchengast, for which details are contained in subsection 6.1.1 above). This information well shows the wealth of experience and expertise standing behind ACE+ in order to ensure its scientific success.

The background information briefly addresses, for each institution, the interest in and foreseen contribution to ACE+ and the relevant experience and expertise. In addition, a brief Curriculum Vitae (CV) of the respective Science Team Member is provided as well as the names and key competences (or further brief CVs) of Associated Science Team Members in the institution. Phase A would be used to refine the envisaged contributions and roles of the team members and their institutions. Also, additional team members/institutions will still be welcomed to the team later if this is deemed sensible and helpful.

Name	Affiliation	Address	Communication
Per Høeg (Lead Member)	DMI	AIR. Division Danish Meteorological Institute (DMI) Lyngbyvej 100 DK-2100 Copenhagen Denmark	Tel: +45-39-157 486 Fax: +45-39-157 460 E-mail: hoeg@dmi.dk
Gottfried Kirchengast (Lead Member)	IGAMUG	Institute for Geophysics, Astrophysics, and Meteorology (IGAM) University of Graz (UG) Universitaetsplatz 5 A-8010 Graz Austria	Tel: +43-316-380 5260 Fax: +43-316-380 9825 E-mail: gottfried.kirchengast@uni-graz.at
Sylvia Barlag	KNMI	Observations Research Division KNMI, P.O. Box 201 NL-3730 AE De Bilt Netherlands	Tel: +31-30-220 6344 Fax: +31-30-221 0407 E-mail: sylvia.barlag@knmi.nl
Stefan Bühler	IEP/UB	Institute of Environmental Physics (IEP) University of Bremen (UB) P.O. Box 330440 D-28334 Bremen Germany	Tel: +49-421-218 4417 Fax: +49-421-218 4555 E-mail: sbuehler@uni-bremen.de
Gunnar Elgered	Chalmers	Onsala Space Observatory Chalmers University of Technology SE-439 92 Onsala Sweden	Tel: +46 31 772 5565 Fax: +46 31 772 5590 E-mail: kge@oso.chalmers.se
Michael Gorbunov	IAP	Institute for Atmospheric Physics (IAP) Pyzhevsky per., 3, Moscow 109017 Russia	Tel: +7-95-951 9574 Fax: +7-95-951 9574 E-mail: ldr@omega.ifaran.ru (or gorbunov@dkrz.de)
Alain Hauchcorne	SA/CNRS	Service d'Aéronomie (SA) du CNRS BP 3 F-91371 Verrières le Buisson France	Tel: +33-1-64 47 42 60 Fax: + 33-1-69 20 29 99 E-mail: alain.hauchecorne@aerov.jussieu.fr
Norbert Jakowski	IKN/DLR	Institut für Kommunikation und Navigation (IKN), Deutsches Zentrum für Luft- und Raumfahrt (DLR) Kalkhorstweg 53 D-17235 Neustrelitz Germany	Tel: +49-3981-480 151 Fax: +49-3981-480 299 E-mail: norbert.jakowski@dlr.de
Luis Kornblueh	MPIM	Max-Planck-Institute for Meteorology (MPIM) Bundesstrasse 55 D-20146 Hamburg Germany	Tel: +49-40-41173 289 Fax: +49-40-41173-366 E-mail: kornblueh@dkrz.de
David Offiler	UKMO	NWP Satellite Applications The Met Office (UKMO) London Road Bracknell, RG12 2SZ United Kingdom	Tel: +44 1344 856298 Fax: +44 1344 854026 E-mail: dave.offiler@metoffice.com
Antonio Rius	IEEC	Institut d'Estudis Espacials de Catalunya (IEEC) Edifici Nexus Gran Capità, 2-4, desp. 201 E-08034 Barcelona Spain	Tel: +34-93-280 2088 Fax: +34-93-280 6395 E-mail: rius@ieec.fcr.es

Table 6.1: ACE+ Science Team Composition — Team Members and Coordinates

6.1.3.1 Koninklijk Nederlands Meteorologisch Instittut (KNMI)

Interest in and Foreseen Contribution to the Mission:

KNMI has a strong interest in the application the profile data as anticipated from the ACE+ mission. The most attractive features of the proposed mission are the high vertical resolution and the all weather capability in the case of application to numerical weather forecasting, and the long-term stability of the system in the case of climate monitoring applications. For both applications the global coverage is of high interest, while for climate monitoring the coverage of the polar regions is of particular importance. For this mission KNMI can act as an expert user evaluating the impact of profile data on regional numerical weather forecast and on climate monitoring through temperature fingerprinting.

Relevant Experience and Expertise at KNMI:

KNMI is a meteorological centre with almost 150 years of experience in research and operations. Over the past five years experience has been gained in GPS meteorology using ground based and radio occultation data through participation in several projects and co-operative actions. Between 1997 and 2000 the mentioned key personnel participated in the European CLIMAP project. Presently, they perform a study into the application of GPS profiles for climate fingerprinting with an anticipated spin-off to operational numerical weather prediction. A national study project for the application of ground based GPS slant data to the resolution of 3D water vapour fields will start early in 2002. This project has strong relations to the international COST 716 action and players.

Science Team Member of KNMI — Curriculum Vitae:

Dr. Sylvia Barlag *Born:* 04/05/1954 *Nationality:* The Netherlands

1984	Ph.D. in Experimental Physics
1984-1989	Research scientist in experimental particle physics (several European Labs, a.o. CERN)
1989-1992	Dynamical Meteorology division, KNMI, climate research scientist
1992-1995	Operations Research Division, KNMI, senior research scientist satellite applications
1995-2001	Head Satellite Data Division, KNMI
2001-present	Head Observations Research Division, KNMI
Experience and Expertise: Dr. Barlag has worked in climate research from 1989 until 1992, after which period she specialised in applications of remote sensing for operations. She first build a group of expertise in that field and became head of a specialised satellite data applications division in 1995. She initiated and managed several research and development projects to stimulate and facilitate the operational use of satellite data in the weather room and in NWP models. From 1993 onward she manages an ongoing project for the development of a national data centre for atmospheric composition data mainly from satellites. In 1997 she became interested in the application of GPS radio occultation profiles, which resulted in participation in the CLIMAP EU project. Since 1998 she chairs the COST-716 Working Group on meteorological applications of ground-based GPS for meteorology. She is the Dutch national representative at EUMETSAT‘s Science and Technology Group and chairs it‘s Operations Working Group. From 2002 she participates in the GRAS-SAF steering group on behalf of the STG. Futhermore, she chairs the Dutch national expert group on atmospheric remote sensing.	
Languages: Dutch, English, French, German	

The full coordinates (address & phone/fax/e-mail details) of Dr. Sylvia Barlag are listed in Table 6.1 (“Science Team Composition”) at the beginning of subsection 6.1.3.

Associated Science Team Member at KNMI:

Dr. Milco Landtman (GPS radio occultation meteorology and climate applications).

6.1.3.2 Institute of Environmental Physics, University of Bremen (IEP/UB)

Interest in and Foreseen Contribution to the Mission:

Main scientific interest is the climate feedback of water vapour and ice in the upper troposphere and lower stratosphere, hence the strong interest in the ACE+ mission. Other interests are inverse theory and radiative transfer modelling, the latter with emphasis on the treatment of the water vapour continuum and absorption and scattering by clouds. The group can contribute to the ACE+ mission in these fields. Together with the Swedish group at Chalmers, the IEP/UB has developed the radiative transfer program ARTS, which was successfully used to assess LEO-LEO transmission measurement performance. Finally, the strong interest in upper tropospheric ice has led to the submission of the CIWSIR opportunity mission proposal. It is to be noted that ACE+ and CIWSIR would have very strong synergy, firstly because accurate water vapour information would improve the cirrus retrieval, secondly because water vapour and ice data taken together would allow very detailed studies of cloud microphysics.

Relevant Experience and Expertise at IUP:

The IUP has been very active in simulation studies for new remote sensing instruments. The group has already participated in four ESTEC studies for the millimetre wave limb sounder MASTER (in two of them as prime contractor), some with particular emphasis on humidity retrieval. Another ESTEC study for MASTER has just started, this time with particular emphasis on the impact of clouds on the measurement, an issue also relevant for ACE+. The group has also participated in an ESTEC study for WATS, where a first analysis of the great potential of LEO-LEO transmission measurements was performed. Besides these activities, Dr. Stefan Bühler is leading a German national project (in the context of AFO 2000) focused on the exploitation of operational meteorological sensors in the microwave spectral range for upper tropospheric humidity research. He has also initialised COST Action 723, aiming at a better understanding of the upper troposphere and lower stratosphere region.

Science Team Member of IEP/UB — Curriculum Vitae:

Dr. Stefan Bühler *Born:* 29/10/1969 *Nationality:* German

1990 – 1993	Undergraduate student, University of Tübingen, Department of Physics.
1993 – 1994	Graduate student, SUNY Stony Brook, Department of Physics. Master Thesis: "A Study of Atmospheric Opacity near 275 GHz at very low temperatures".
1994 –1998	PhD student, University of Bremen. PhD Thesis: "Microwave Limb Sounding of the Stratosphere and Upper Troposphere".
1998 – present	Assistant Professor, University of Bremen.
Experience and Expertise: Dr. Stefan Bühler has carried out ESTEC simulation studies for limb sounders and LEO-LEO transmission measurements. He has also developed algorithms for the Millimetre wave Atmospheric Sounder (MAS) and applied these to retrieve upper tropospheric water vapour fields. His research interests have already been outlined above. A list of publications, as well as other information, can be found on http://www.sat.uni-bremen.de/. At the University of Bremen, Stefan Bühler is a lecturer on various topics, including Radiative Transfer, Meteorology, Atmospheric Physics, and Inverse Theory.	
Languages: German, English	

The full coordinates (address & phone/fax/e-mail details) of Dr. Stefan Bühler are listed in Table 6.1 ("Science Team Composition") at the beginning of subsection 6.1.3.

6.1.3.3 Chalmers University of Technology (Chalmers)

Interest in and Foreseen Contribution to the Mission:

The researchers at the Department of Radio and Space Science at Chalmers have an interest in the development and validation of inversion algorithms for occultation data, in particular LEO-LEO data. This includes studies of models for absorption coefficients due to the atmospheric constituents of interest – water vapour, liquid water (in the form of clouds and rain), and oxygen – as well as a statistical characterisation of the variability of the wet atmosphere (amounts of water vapour and cloud liquid) using ground-based GPS and microwave radiometry. We are also interested in expected synergy effects, when remotely sensing the atmospheric water vapour both in LEO-LEO geometries and from the ground, and possibly also in investigating the use of tomographic methods.

Relevant Experience and Expertise at Chalmers:

Already in 1987 we started to continuously operate a ground-based GPS station, which is now a site in the International GPS Service for Geodynamics (IGS). Together with the National Land Survey of Sweden we established the continuously operating Swedish GPS network SWEPOS in 1993. Data from this network have been acquired and analyzed in order to measure 3D crustal motions due to postglacial rebound in Fennoscandia, and to estimate and validate time series of integrated amounts of atmospheric water vapour above GPS sites in the region. We contributed to the proposed WATS mission through the ESA study contract "Assessment of uncertainties in LEO-LEO transmission observations through the troposphere/stratosphere".

Science Team Member of Chalmers — Curriculum Vitae:

Prof. Gunnar Elgered *Born:* 08/01/1955 *Nationality:* Swedish

1983	Ph.D. Chalmers, Gothenburg, Sweden
1987	Visiting researcher - Harvard-Smithsonian Center for Astrophysics, Cambridge
1984-1998	Assistant Professor , Univ. lecturer, Chalmers
1998-present	Professor, Chalmers
Experience and Expertise: Prof. Elgered has his main research is in the areas of space geodesy and radio meteorology. Previous work included many national and international projects using Very Long Baseline Interferometry, ground-based GPS, and microwave radiometry. During 2001 he was one of the SPG members of the proposed WATS mission. He is presently chairman of COST Action 716 "Exploitation of Ground-Based GPS for Climate and Numerical Weather Prediction Applications." He is responsible for teaching courses on Engineering Measurements, Satellite Communication, and Radar and Communication.	
Languages: Swedish, English	

The full coordinates (address & phone/fax/e-mail details) of Prof. Gunnar Elgered are listed in Table 6.1 ("Science Team Composition") at the beginning of subsection 6.1.3.

Associated Science Team Members at Chalmers:

Dr. Patrick Eriksson *Born:* 11/25/1964 *Nationality:* Swedish

1999	Ph.D., Environmental Sciences, Chalmers
1999	Postdoctoral research scientist, University of Bremen, Germany
1999-present	Assistant Professor , Chalmers
Experience and Expertise: Dr. Patrick Eriksson has more than 8 years experience of forward modelling and retrievals of microwave atmospheric observations. Satellite techniques for observations of the upper troposphere are a main interest and he has participated in several ESTEC studies in this direction, including the technical responsibility for latest WATS study (Contract No. 15341/01/NL/SF). He is co-organiser of three international workshops on atmospheric microwave radiative transfer.	
Languages: Swedish, English, some Spanish	

and
Dr. Jan Johansson (GPS applications in geodesy, meteorology, and climate studies).

Dr. Eriksson has been named by Prof. Elgered the deputy science team member.

—

6.1.3.4 Institute for Atmospheric Physics, Russian Acad. of Sciences (IAP)

Interest in and Foreseen Contribution to the Mission:

Interpretation of radio occultation data in the lower troposphere is of key importance for numerical weather prediction. For the effective use of lower-tropospheric data, it is necessary to handle data in areas of multipath propagation. My foreseen contribution consists in the further elaboration of radio-holographic methods of the analysis of wave fields registered during radio occultation experiments, such as back-propagation, canonical transform, radio-optics method. This will be performed for both GNSS-LEO and LEO-LEO occultations. Another important direction is the elaboration of the methods of direct 3D/4D variational assimilation of radio occultation data into numerical weather predication and climate models. This technique is the most promising and effective way of the utilization radio occultation data, especially in the lower troposphere. My foreseen contribution in this area consists in the design of observation operators and corresponding tangent-linear models for radio occultation data.

Relevant Experience and Expertise at IAP:

The Institute for Atmospheric Physics, Russian Academy of Sciences, has since many years made pioneering contributions to radio occultation investigations, in particular on theoretical and computational aspects. Chief scientist Prof. Alexander S. Gurvich (thesis advisor of M. Gorbunov) and his co-workers, especially Dr. Krasil'nikova, have been the first worldwide to propose (in the mid-eighties) the use of GNSS signals for terrestrial radio occultations. Dr. Gorbunov and Dr. Sokolovskiy (currently mostly at UCAR Boulder) from the IAP are internationally leading scientists in the field of radio occultation algorithms in the troposphere.

Science Team Member of IAP — Curriculum Vitae:

Dr. Michael Gorbunov *Born:* 07/09/1960 *Nationality:* Russian

1977 – 1983	Studies at Moscow Physical-Technical Institute
1983	M.Sc. degree in Physics
1983 – 1986	Post-graduate student at Institute for Atmospheric Physics
1989	Ph.D. degree in Physical-Mathematical Sciences/Geophysics
1986 – present	Minor research scientist, research scientist, senior research scientist at Institute for Atmospheric Physics, Russian Academy of Sciences.
Experience and Expertise: Michael Gorbunov started his research in 1986 on topics of inverse problems of remote sensing of refractivity by means of GNSS signals. He investigated the possibility of tomographical reconstruction of atmospheric parameters from radio occultation data acquired by a multi-satellite system. He participated in processing GPS/MET data and performed the research on the topic of the application of the back-propagation techniques for resolving multipath propagation effects in the lower troposphere. He designed the observation operator and corresponding tangent-linear model for radio occultation data for MPIM's ECHAM atmospheric general circulation model. He elaborated the canonical transform method for processing radio occultation data in multipath areas. He started work on wave-optics forward models and inversion algorithms for LEO-LEO occultations. He published ~35 international papers/reports in the occultation field.	
Languages: Russian, English, German, some Danish	

The full coordinates (address & phone/fax/e-mail details) of Dr. Michael Gorbunov are listed in Table 6.1 ("Science Team Composition") at the beginning of subsection 6.1.3.

6.1.3.5 Service d'Aéronomie du CNRS (SA/CNRS)

Interest in and Foreseen Contribution to the Mission:

The upper troposphere-lower stratosphere (UTLS) is a key region to understand processes involved in the climate system. The lower stratosphere is the region where the ozone depletion is most pronounced. In the Arctic vortex, the intensity of ozone depletion is related to the frequency of occurrence of polar stratospheric clouds, which is very sensitive to the temperature in the lower stratosphere. Water vapour plays a crucial role in the radiative budget of UTLS as well as in the photochemistry of stratospheric ozone. Mechanisms of injection of water vapour in the tropical stratosphere are still unclear. ACE+ will provide unequalled accurate and vertically resolved profiles of temperature and water vapour to address these issues.
SA/CNRS will contribute in-depth middle atmosphere and climate physics expertise via science team membership of Dr. Hauchecorne as well as play a key role in providing validation data for temperature in the stratosphere and water vapour in the upper troposphere and in preparing relevant campaigns.

Relevant Experience and Expertise at SA/CNRS:

SA/CNRS is one of the leading institutes in the Network for Detection of Stratospheric Changes (NDSC). It is in charges of several lidar stations in tropical, mid-latitude and polar regions and in an unique position to furnish high-quality validation data for temperature in the stratosphere and water vapour in the upper troposphere. More information on the expertise available can be found via http://www.aero.jussieu.fr/equipe/DCAM.

Science Team Member of SA/CNRS — Curriculum Vitae:

Dr. Alain Hauchecorne *Born:* 05/07/1951 *Nationality:* French

1970 – 1973	*Studies at* Ecole Polytechnique, Paris
1973	Diplom "Ingénieur de l'Ecole Polytechniuqe, Paris"
1977	Dr 3ème cycle in Atmospheric Sciences, Paris 6 University
1983	Dr es Physics, Paris 6 University
1973 – present	Scientist at Service d'Aéronomie: CNES Research Grant (1973-1979), Ingénieur dev recherche (1979-1987), Chargé de recherche (1987-1994), Directeur de recherche (1994-present)

Experience and Expertise:

Scientific field:

- Development of lidar sounding systems for temperature, wind and water vapor
- Exploitation of lidar data for dymaics and climate of the upper troposphere, stratosphere and mesosphere (long-term changes in temperature and ozone, planetary and gravity waves)
- Simulations numériques sur la dynamique de l'atmosphère moyenne
- Analysis and assimilation of global stratospheric satellite data (UARS, ENVISAT, ODIN, GPS).

Research management:

Since 1988: Supervision of PhD students.
Since 1994: Head of "Dynamics and Climate of the Middle Atmosphere" group at Service d'Aéronomie.
Coordination of 3 European Commission projects.
Member of ESA and EUMETSAT Science Advisory Groups (GOMOS on ENVISAT, GRAS on Metop).
Member of the WATS Mission Science Preparatory Group of ESA in 2001.

Languages: French, English

The full coordinates (address & phone/fax/e-mail details) of Dr. Alain Hauchecorne are listed in Table 6.1 ("Science Team Composition") at the beginning of subsection 6.1.3.

6.1.3.6 Institute for Communication and Navigation, German Aerospace Center (IKN/DLR)

Interest in and Foreseen Contribution to the Mission:

Since IKN/DLR is studying the ionosphere impact on Global Navigation Satellite Systems such as GPS and GALILEO, IKN is strongly interested in monitoring the ionosphere by ACE+ satellites. It thus offers to contribute to the planning, coordination and execution of the ACE+ mission in the area of ionosphere and space weather aspects, if corresponding work is supported by ESA or complementary ACE team project funds. During the pre-launch phase, the contributions could be related to define mission requirements, develop/improve retrieval software for reconstructing 4D-electron density distributions, establish an operational data processing system and co-ordinate upper atmosphere related work. Beside its own scientific use, IKN could establish an Ionosphere Space Weather Data Center data to maintain an operational data service for the international science community and application customers in navigation and surveying.

Relevant Experience and Expertise at IKN/DLR:

The IKN/DLR has long-standing experience in monitoring, studying and modeling the ionosphere. The Institute is currently involved in several projects supported by ESA (EGNOS-ESTB), EU (SWE), NATO (Plasmasphere model), and national (CHAMP, DACH) sources, which are closely related to the scientific topics of the ACE+ mission in the ionosphere area.
Since IKN is responsible for the analysis of ionosphere GPS data measured onboard the German CHAMP mission, the corresponding local team is well experienced in analyzing radio occultation data based on effective retrieval algorithms, in operational data processing, and in the generation of value-added products.

Science Team Member of IKN/DLR — Curriculum Vitae:

Dr. Norbert Jakowski *Born:* 15/03/1948 *Nationality:* Germany

1966 – 1974	Studies at University of Rostock
1973/ 1974	Diploma in physics/ PhD degree in solid state physics
1974 – 1991	Research scientist at Academy of Sciences of GDR
1992 – present	Research scientist at DLR, Institute for Communication and Navigation
Experience and Expertise: Numerical modeling of thermosphere/ionosphere, empirical modeling of the ionosphere, ionosphere sounding by using GPS signals, ionosphere modelling, ionosphere impact on radio wave propagation, in particular on Global Navigation Satellite System signals, development of radio occultation retrieval algorithms, participation in a number of national and international projects related to ionospheric reasearch and ionospheric impact on GPS applications, CHAMP ionosphere sounding principal investigator, national representative of COST 271 and working group leader, member of the National URSI Committee, member of ESA's Space Weather Working Team, author of more than 140 publications, most of them related to ionospheric research and radio wave propagation.	
Languages: German, English, some Russian	

The full coordinates (address & phone/fax/e-mail details) of Dr. Norbert Jakowski are listed in Table 6.1 ("Science Team Composition") at the beginning of subsection 6.1.3.

Associated Science Team Members at DLR/IKN:

Dr. Andreas Wehrenpfennig (operationally working systems, CHAMP processing system)
Mr. Stefan Heise (ionospheric/plasmaspheric monitoring using GPS-LEO measurements)

6.1.3.7 Max-Planck-Institute for Meteorology (MPIM)

Interest in and Foreseen Contribution to the Mission:

Major interest is the utilization of ACE+ radio occultation observations for the (global) reconstruction of atmospheric refractivity. Investigation of bending angle profiles by means of diffraction theory methods indicates that in the lower troposphere (below 5 km), the bending angle profiles often undergo strong scintillations due to the complicated structure of the atmospheric humidity, which is the signature of atmospheric turbulence. The turbulent structure is not reproduced by Global Atmospheric Circulation Models and must be looked at as a source of measurement noise, which will be relevant in the lower (tropical) troposphere. Creation of a model of this noise is an important problem foreseen to be addressed.
Probing the atmosphere by analysing signals of occulted GNSS or LEO satellites holds the promise of providing self-calibrated measurements of the temperature and water vapour structure of high accuracy, but the observations provided are dissimilar to those from existing radiometric retrievals. This requires new retrieval and data assimilation systems to handle such data in a proper way, the development of which is one focus at MPIM. A ray-tracer-based GNSS-LEO observation operator has already been developed, which allows for a most precise retrieval of the atmospheric state. The ultimate goal of the precise state determination is reliable climate monitoring and trend analysis also in the lower to middle troposphere.

Relevant Experience and Expertise at MPIM:

The MPIM in Hamburg was established in 1975 and is devoted to climate research. The Institute is led by Prof. Grassl, Prof. Brasseur, and Prof. Bengtsson, all atmospheric scientists with worldwide reputation. In addition, Prof. Lüst, former President of the Max-Planck Society and former Director-General of ESA is honorary Director at the Institute.
The MPIM has a long outstanding record in climate research and modeling. The research covers the complete climate system including oceans, atmosphere, cryosphere and biosphere and associated physical, chemical and biological processes. Of particular interest has been a series of advanced studies on the effect of the atmospheric greenhouse gases and the development of a coupled ocean/atmosphere system to be used for long-range prediction.
Currently there is a group working actively on the development of data assimilation techniques for the atmosphere and the ocean, together with collaborating groups worldwide. The radio occultation research efforts, into which MPIM is involved since the early nineties already and which are now led by Dr. Luis Kornblueh, are part of this group's activities.

Science Team Member of MPIM — Curriculum Vitae:

Dr. Luis Kornblueh *Born:* 14/08/1964 *Nationality:* Austrian

1991	M.Sc. Technical University Darmstadt, Germany
1997	Ph.D. in Meteorology, University of Hamburg, Germany
1997 – present	Research Scientist at the MPIM, Hamburg, Germany
Experience and Expertise: Dr. Kornblueh's M.Sc. work was concerned with the development of a soil model for mesoscale-γ simulations with the 3D-non-hydrostatic model FITNAH. A simulation of a winter situation for Zurich was performed. The Ph.D. work was focused on the estimation of arctic surface energy fluxes with the aid of satellite measurements. The developed 1D model was used in a 1DVAR version. The model contains a small band radiation scheme and an explicit cloud micro-physical scheme. The model uses operator overloading and graph theory-based methods for determining the derivatives of the model (automatic differentiation). Since 1997 Dr. Kornblueh then worked at the MPIM on radio occultation data assimilation techniques and basic impact studies of these measurements. In addition he is working on the ECHAM model and coupled climate modeling. He is Member of the joint ESA/EUMETSAT GRAS Science Advisory Group.	
Languages: German, English, Spanish	

The full coordinates (address & phone/fax/e-mail details) of Dr. Luis Kornblueh are listed in Table 6.1 ("Science Team Composition") at the beginning of subsection 6.1.3.

Associated Science Team Members at MPIM:

Dr. Andreas Rodin *Born:* 30/03/1958 *Nationality:* German

1986	M.Sc. University of Hamburg/DESY, Germany
1991	Ph.D. in Meteorology, University of Hamburg, Germany
1991 – present	Research Scientist at Univ. of Hamburg, GKSS, and MPIM, Hamburg, Germany
Experience and Expertise: M.Sc. thesis at DESY (Deutsches Elektronen Synchrotron), Hamburg, on the topic "Determination of the spatial resolution of a drift chamber". Ph.D. thesis on "Numerical simulation of atmospherics fronts". Then at the Meteorological Institute of the University of Hamburg working on "frontal systems and orography". Later at the Institute for Hydrophysics at GKSS working on IMAS (Integrated Modelling and Analysis System), a programming environment for automatic differentiation of Fortran codes (derivation of the tangent-linear and adjoint model) for inverse modelling and data assimilation; application of IMAS in feasibility studies for the retrieval of soil moisture; adaption of a 1D transport model of tidal flows for application with IMAS (optimisation, inclusion of a mass conserving transport algorithm). Now working for MPIM and DWD on the implementation of an operational 3DVAR system for NWP and climate data assimilation.	
Languages: German, English	

Prof. Lennart Bengtsson *Born:* 15/05/1935 *Nationality:* Swedish

1957/ 1959	B.Sc./ M.Sc. University of Uppsala, Sweden
1964	Ph.D. (fil. lic.) in Meteorology, University of Stockholm, Sweden
1964 – present	SMHI, Sweden (1960-1974), ECMWF, U.K. (1974-1990), MPIM, Hamburg (1991-present)
Experience and Expertise: Prof. Bengtsson was research meteorologist at the Swedish Meteorological and Hydrological Institute in Stockholm, Sweden, from 1960 to 1965, and Assistant Chief of Division from 1965 to 1974. Thereafter member of Interim Planning Staff at ECMWF, United Kingdom, and from 1974 to 1975 Head of Research. Deputy Director at ECMWF from 1976 to 1981 and Director of ECMWF 1982 to 1990. From 1991 to 2000 he was Director of the MPIM, Hamburg. Presently Director Emeritus at MPIM and Professor at the University of Reading, U.K. Prof. Bengtsson is working, among others, in the following groups: Chair of International BALTEX Science Steering Board, Chair of WCRP Working Group on Coupled Models, Chair of ESA Earth Science Advisory Committee. Member of the Science Council for CERFACS, Member of MISTRA (Swedish Environmental Board), Member of the German National Committee for Global Change. He is member of the editorial boards of Acta Geophysica Polonica, Meteorology and Atmospheric Physics and Tellus. His main working areas are numerical weather prediction, data assimilation, and climate modeling and prediction.	
Languages: Swedish, English, German	

—

6.1.3.8 Met Office, United Kingdom (Met Office)

Interest in and Foreseen Contribution to the Mission:

The Met Office is a centre for global operational Numerical Weather Prediction and Climate Monitoring and Prediction. With the support of our experienced personnel and existing infrastructure, we will significantly contribute to the ACE+ Mission in four principle areas:

- Review and specification of User Requirements for NWP
- Validation of radio occultation products processed by other team partners against global NWP analyses and other data such as radiosondes
- Development of techniques for assimilation of GNSS/LEO-LEO data in NWP systems
- Assessment of impact of GNSS/LEO-LEO data on NWP products.

The interest covers radio occultation soundings on a global basis. The assimilation system development for NWP will be targeted initially at 3DVAR assimilation of refractivity profiles, planning for operational capability well before the launch of the ACE+ satellites. Furthermore, contributions to bending angle assimilation research are foreseen as well as enhancement of the 3DVAR to a 4DVAR system before ACE+ launches.

Relevant Experience and Expertise at the Met Office

The Met Office has been actively investigating the potential use of radio occultation (RO) data in NWP since 1996, and has contributed to ESA and European Union research projects in this area. The Met Office is currently a partner in the EUMETSAT GRAS-SAF, developing forward models and initial software for the pre-processing and assimilation of RO data from the GRAS instrument on Metop into NWP models. We have developed sophisticated, statistically optimal retrieval techniques which might be used, as a first step, in an operational NWP system. These approaches enable the simultaneous retrieval of temperature, humidity and surface pressure from the measurement. More recently, the Met Office has been investigating the smoothing of RO signals in the upper atmosphere and the magnitude of RO bending angle and refractivity errors caused by horizontal refractivity gradients in the troposphere. Current work includes derivation of observation error covariance matrices essential to any operational variational assimilation technique.

Science Team Member of Met Office — Curriculum Vitae:

Mr. David Offiler *Born:* 08/11/1952 *Nationality:* British

1974	B.Sc. Honours (2.1) in Physics & Meteorology, Reading, UK
1974–1976	Operational Instrumentation Branch, Met Office, Bracknell, UK
1977–1993	Satellite Meteorology Branch, Met Office, Bracknell, UK
1993–1996	Meteorological Research Flight, Met Office, Farnborough, UK
1996–present	Head of Satellite Active Sensing Group, Met Office, Bracknell, UK
Experience and Expertise: Mr. Offiler has worked in the field of satellite meteorology since 1977 specialising in active remote sensing using wind scatterometers and – since 1996 – ground-based GPS for meteorology and radio occultation profiling, He has managed several contracts for the Met Office on these subjects, including work for the EU, ESA and EUMETSAT and is a member of several expert & advisory groups of ESA & EUMETSAT. He is an active member of COST-716 WG3, leading on data formats and user requirements. He is lead author for the User Requirements Document for the EUMETSAT GRAS SAF.	
Languages: English	

The full coordinates (address & phone/fax/e-mail details) of Mr. David Offiler are listed in Table 6.1 ("Science Team Composition") at the beginning of subsection 6.1.3.

Associated Science Team Members at Met Office:

Dr. Sean Healy *Born:* 21/2/1969 *Nationality:* British

1990	B.Sc. Honours (2.1) in Physics, University of Leeds, UK
1993	D.Phil. in Computational Physics, University of York, UK
1993–1996	Post Doctoral Research Fellow, Department of Physics, University of York, UK
1996–present	GPS Research Scientist, SAS Group, Met Office, Bracknell, UK
Experience and Expertise: Dr. Healy has developed a 1DVAR retrieval technique to combine background NWP data and measured RO refractivity profiles in a statistically optimal way and he has recently been investigating RO measurement errors due the assumption of spherical symmetry. This work has required the development of a 3-dimensional ray tracer. He is currently deriving statistics for this source of measurement error and developing a fast bending angle forward model.	
Languages: English	

Dr. Chris Marquardt *Born:* 09/04/1964 *Nationality:* German

1997	Ph.D., Free University of Berlin, Germany
1990–1993	Research assistant at the Free University of Berlin, Germany
1998	Postdoctoral research scientist at the Free University of Berlin, Germany
1999–2002	Postdoctoral research scientist at GFZ Potsdam, Germany
2002–present	Research Scientist at the Met Office
Experience and Expertise: Dr. Marquardt has collaborated in several research projects in climate and ozone research at the Free University Berlin between 1990 and 1998. He currently works on an automated quality control system, variational retrieval approaches for, and the validation of CHAMP radio occultation data.	
Languages: German, English, some French	

6.1.3.9 Institut d'Estudis Espacials de Catalunya (IEEC)

Interest in and Foreseen Contribution to the Mission:

The IEEC research in the area of the Earth Sciences is focused on applications of space technologies to the study of the Earth. In relation to the ACE+ proposal the group has ample experience in data processing of GPS signals, received at LEO satellites, aircrafts or ground stations, for atmospheric and ionospheric studies. For these studies we have developed advanced software tools for the analysis of GPS observables. In addition, IEEC, jointly with DMI and the Met Office, is a member of the EUMETSAT GRAS-SAF Consortium.
Our intention is to contribute to the mission by providing the expertise acquired in tropospheric and ionospheric studies (e.g., on retrieval processing and 3D/4D tomography), both in the mission preparation phase as well as during the lifetime of the project.

Relevant Experience and Expertise at IEEC:

The IEEC Earth Science Department (ESD) has acquired experience and developed expertise in the following lines related to this project:
GPS Real Time Water Vapour retrieval Systems: Design and implementation of processors.
GPS Meteorology: use of GPS-derived observations to monitor NWP systems (e.g., MM5, HIRLAM), and GPS data assimilation in NWP models to improve short-range forecasts.
GPS Radio Occultation analysis: Implementation of a data analysis system for tropospheric and ionospheric applications.
For more information see http://www.ieec.fcr.es/recerca/gnss/index.html.

Science Team Member of IEEC — Curriculum Vitae:

Prof. Antonio Rius *Born:* dd/mm/yyyy *Nationality:* Spanish

1974	Ph.D degree, Barcelona University, Spain
1975 – 1985	Member of the Technical Staff at NASA's Deep Space Communications Complex (Madrid)
1986	Titular Professor at Madrid University, Spain
Since 1986	Researcher at the Spanish – Consejo Superior de Investigaciones Científicas (CSIC)
1996 – present	Head of the Earth Science Dept (ESD) at the Institute for Space Studies (IEEC) of Catalonia
Experience and Expertise: Research scientist of the Consejo Superior de Investigaciones Científicas (CSIC, Spanish Research Council). From 1975 to 1985 at NASA's Deep Space Communications Complex, responsible for the radioastronomical activities as well as the development and implementation of radioastronomical techniques for tracking purposes. During 1986 Professor Titular at Madrid University. Since 1986 with the CSIC. Since 1996 Head of the IEEC Earth Science Department. Prof. Rius's research interests include radioastronomy, radio occultations and their application to Earth Science.	
Languages: Spanish, English, French	

The full coordinates (address & phone/fax/e-mail details) of Prof. Antonio Rius are listed in Table 6.1 ("Science Team Composition") at the beginning of subsection 6.1.3.

Associated Science Team Members at IEEC:

Dr. José Mª Aparicio *Born:* 01/12/1967 *Nationality:* Spanish

1990/ 1994	B.Sc. in Physics/ Ph.D. degree from Barcelona University, Spain
1990 – 1994	Assistant researcher at the Spanish Research Council – CSIC
1995 – 1998	Department of Physics of the University of Montreal, Canada
1999 – present	Researcher of the Earth Science Dept (ESD) at the Institute for Space Studies (IEEC) of Catalonia
Experience and Expertise: Dr. Aparicio has been assistant researcher of the CSIC from 1990 to 1994 and from 1995 to 1998 researcher at the Department of Physics of the Univ. of Montreal, where he worked in their stellar seismology research program. In 1999 he became researcher of the Earth Sciences Department of the IEEC, where he works on the application of GNSS radio occultation to meteorology. He has heavily contributed to the RO processing systems now available at IEEC.	
Languages: Spanish, English, French	

and **Dr. David Pino** (mesoscale modeling, GPS-derived water vapour, NWP models).

6.2 Science User Team

6.2.1 Science User Team Overview

As noted in subsection 6.1.2, the scientific team behind the ACE+ mission has been organized into a twofold structure, a *Science Team* and a *Science User Team*, respectively. While the Science Team was already introduced in section 6.1, this subsection gives an overview on the *Science User Team*, followed by details on all members in the next subsection, 6.2.2.

As the Science Team, the ACE+ **Science User Team** is led by P. Høeg (DMI) and G. Kirchengast (IGAM/UG) and also this team is composed of many international partners. The institutions include: **Harvard Univ.**, USA, **Univ. of Florence**, Italy, **Purdue Univ.**, USA, **CRL**, Japan, **NRL Washington**, USA, **FMI**, Finland, **Polytechnico di Torino**, Italy, **UCAR Boulder**, USA, **Univ. of Arizona**, USA, **Kyoto Univ.**, Japan, **Space Research Centre, Warsaw**, Poland, and **Inst. of Engineering and Electronics, Moscow**, Russia (for detailed names see the descriptions in section 6.2.2).

The Science User Team members (in total 12 already now) – involving most leading non-European institutions known for excellence in radio occultation research and/or application – represent wide and diverse expertise in many different fields of ACE+ data exploitation, from NWP and climate research interests via atmospheric dynamics, physics, and chemistry interests to ionosphere, space weather, and geodesy interests.
In each institution there is not only a single Science User Team member but rather complete local teams have been formed. Usually these teams involve several associated team members, with the full team being interested in data exploitation (see subsection 6.2.2).

Furthermore, some partners would be prepared to directly contribute to ACE+ mission preparation, similar to Science Team members. One partner – University of Arizona, Tuscon, backed up by Jet Propulsion Lab, Pasadena – even offers the option of a complete LEO-LEO add-on instrumentation (183 GHz stratospheric water vapor capability; 195 GHz ozone capability) based on NASA funds; see section 6.4 and the respective Letter of Support sent to ESTEC under separate cover. Consideration of inclusion of this add-on option could be part of phase A work (e.g., parallel "add-on phase A" funded by NASA). Scientifically, as correctly expressed in the Univ. of Arizona letter, the inclusion would be highly worthwhile.

6.2.2 Science User Team Members

This section provides background information for each Science User Team institution and member involved so far (alphabetically ordered by name of the main team member). It shows the strong support received for ACE+ from many excellent scientists and institutions worldwide and thus highlights its extreme relevance and timeliness.

The information briefly addresses, for each institution, the interest in ACE+ and plans for data exploitation as well as relevant experience and expertise. In addition, a brief Curriculum Vitae (CV) of the respective Science User Team Member is provided as well as the names and key competences (or further brief CVs) of further or associated Science User Team Members in the institution. Phase A would be used to refine the envisaged plans and roles of user team members and their institutions.

Furthermore, a series of additional team members and institutions will certainly join in the future, provided ACE+ proceeds with phase A. As an example, weather centers like ECMWF, Meteo France, and DWD ("Deutscher Wetterdienst") have already expressed strong interest and are prepared to join given a more firm mission status.

6.2.2.1 Harvard University, U.S.A. (HU)

Interest in the Mission and Plans for Data Exploitation:

Accurate monitoring of climate parameters is crucial to society's goal of accurately predicting climate change. We hope to exploit data from the ACE+ Earth Explorer mission to test and improve GCM physics and dynamics.

Aerosols affect the climate by scattering and absorbing solar radiation (direct effect), and also by altering cloud microphysical properties (indirect effect). Despite their importance to radiative forcing, the level of scientific understanding of aerosols is low to very low according to the latest IPCC report. Accurate water vapour information is important to describe aerosol phase and evolution. To test our understanding of the hygroscopic properties of different tropospheric aerosols and their radiative forcing effects it is essential to have accurate global scale measurements of water vapour. This proposed mission represents the opportunity for such a dataset. The high vertical resolution and all-weather properties of these data will also be key to this proposed research.

Scientific Expertise at HU:

HU is a world-class center for research in atmospheric dynamics and chemistry. There are several faculty members and over 90 graduate students, post-doctoral fellows, engineers and scientists working in the atmospheric sciences. Particular areas of expertise include: tropospheric transport, stratospheric chemistry, climate dynamics, paleoclimate modelling, and atmospheric physics.

Science User Team Members of HU — CV and Coordinates:

Prof. James G. Anderson *Born:* 04/02/1944 *Nationality:* U.S.A.

1963 – 1966	B.S. Physics, University of Washington
1966 – 1970	Ph.D. Physics/Astrogeophysics, University of Colorado
1982 – present	Philip S. Weld Professor of Atmospheric Chemistry, Harvard University

Experience and Expertise: Prof. Anderson's research addresses three domains within physical chemistry:
(1) chemical reactivity viewed from the microscopic perspective of electron structure, molecular orbitals and reactivities of radical-radical and radical-molecule systems;
(2) chemical catalysis sustained by free radical chain reactions that dictate the macroscopic rate of chemical transformation in the Earth's stratosphere and troposphere;
(3) mechanistic links between chemistry, radiation, and dynamics in the atmosphere that control climate.
Studies are carried out both in the laboratory, wherein elementary processes can be isolated, and within natural systems, in which reaction networks and transport patterns are dissected by establishing cause and effect using simultaneous, in situ detection of free radicals, reactive intermediates, and long-lived tracers.
Prof. Anderson is a Member of the National Research Council Committee on Global Change Research, a Fellow of the American Geophysical Union and the American Academy of Arts and Sciences, and a Member of the National Academy of Sciences and of the American Philosophical Society.
Further information on his research interests can be found at http://www.arp.harvard.edu.

Languages: English

Coordinates: Prof. James G. Anderson
Department of Chemistry and Chemical Biology, Harvard University,
12 Oxford Street,
Cambridge,
MA 02138, USA
Tel: +1-617-495 5922
Fax: +1-617-495 4902
E-mail: anderson@huarp.harvard.edu

Dr. Paul I. Palmer

Born: 29/05/1974 *Nationality:* British

1992 – 1995	B.Sc. Physics, Bristol University, U.K.
1995 – 1999	D.Phil. Physics, Oxford University, U.K.
Summer 1999	Postdoctoral Research Assistant, School of Geography, Oxford University
1999 – present	Postdoctoral Fellow, Division of Engineering of Applied Sciences, Harvard University, USA

Experience and Expertise: Paul Palmer wrote his doctoral thesis on the application of GPS radio occultation bending angle data to numerical weather prediction analyses. This work involved the design of an optimal estimation inverse model to retrieve temperature, humidity and surface pressure simultaneously from bending angle observations. This inverse model was applied to real GPS/MET bending angles and subsequent retrieved quantities were successful in improving upon the *a priori* NWP data and reproducing temperature and humidity radiosonde profile data. More recently, his interests have focused on satellite observations of tropospheric species and their application to improving our knowledge of tropospheric ozone. He is a frequent reviewer for Journal of Geophysical Research and has organised and chaired an AGU conference session on the application of satellite observations of the global troposphere. Further information on his research experience can be found at http://www.people.fas.harvard.edu/~ppalmer.

Languages: English

Coordinates: Dr. Paul Palmer
Pierce Hall, 29 Oxford Street, Cambridge, MA 02138, USA
Tel: +1-617-495 0810, Fax: +1-617-495 4551, E-mail: pip@io.harvard.edu

Dr. Daniel B. Kirk-Davidoff

Born: 15/05/1968 *Nationality:* U.S.A.

1986-1990	B.S. Geology and Geophysics, Yale University
1991 – 1997	Ph.D. Meteorology, Massachusetts Institute of Technology
1997 - 1999	Postdoctoral Fellow, Division of Engineering and Applied Sciences, Harvard University
1999 – present	Research Associate, Division of Engineering of Applied Sciences, Harvard University

Experience and Expertise: Dr. Kirk-Davidoff's interests are in climate dynamics. He has used simple climate models to investigate the physics controlling the pole-to-equator temperature gradient and the slope of the tropopause, to explore the interaction of stratospheric water vapor and tropospheric climate. He has helped to plan and execute a field mission in Costa Rica (CWVCS, Cloud and Water Vapor in the Climate System), which used instruments mounted on the NASA WB-57 to gather data about cloud processes at the tropical tropopause, and their impact on stratospheric water vapor. Most recently he has been analysing sampling error for a proposed suite of climate monitoring satellites.
Further information on his research experience can be found at http://www.arp.harvard.edu/~davidoff.

Languages: English, German

Coordinates: Dr. Daniel Kirk-Davidoff
Anderson Group/CCB, 12 Oxford Street, Cambridge, MA 02138, USA
Tel: +1-617-495 5922, Fax: +1-617-495 4902, E-mail: davidoff@huarp.harvard.edu

—

6.2.2.2 Dipartimento di Elettronica e Telecomunicazioni, Università di Firenze, Italy (DET/UF)

Interest in the Mission and Plans for Data Exploitation:

DET/UF is particularly interested in investigating the possibility offered by the project to profitably apply tomographic data processing in the reconstruction of the spatial distribution of the tropospheric water vapour. This is primarily related to the fact that the LEO-LEO configuration in occultation mode yields measurements in K band that are directly depending on the water vapour content along the propagation path. A time sequence of these measurements is a set of input parameters for tomographic data processing. The attenuation time series obtained during the relative LEO-LEO motion gives the possibility to "cover" a vertical section of the troposphere and to get, through tomographic procedures and by possibly involving slant integral water vapour data, the two-dimensional distribution of water vapour in that section.
Furthermore, DET/UF could contribute to LEO-LEO performance studies, for example, already during Phase A of the ACE+ mission.

Scientific Expertise at DET/UF:

The DET/UF group has provided original contributions to the development of tomographic systems (and related data processing procedures) for cases characterized by low spatial resolution (e.g., due to the low number of attenuation measurements). More specifically, DET/UF carried out feasibility studies in a number of different applications involving the exploitation of attenuation measurements made along point-to-point transmitter-receiver (or transmitter-retroreflector-receiver) links in stand-alone mode or inserted in a tomographic network, at both single and multifrequency, in the microwaves and infrared region. Such applications span from the recontruction and tracking of rainfall fields and of atmospheric component concentration to the estimate of tropospheric water vapour.

Science User Team Member of DET/UF — CV and Coordinates:

Dr. Luca Facheris *Born:* 03/12/1962 *Nationality:* Italian

1982 – 1989	Studies at University of Florence
1988	Visiting student at the Penn State University
1989	M.Sc. degree (cum laude) at the University of Florence in Electronic Engineering; winner of a prize for best thesis in Electrical Engineering in 1990
1993	Ph.D. degree at the University of Padua in Electronic and Information Engineering
1993 – present	Assistant Professor in the Telecommunication and Remote Sensing area at the University of Florence (1993); Member of the Ph.D. commission in „Methods and Technologies for Remote Sensing" (1999); Qualification for Associate Professor (2001), waiting for final appointment at the University of Florence
Experience and Expertise: The main expertise of Dr. Facheris is in the area of data and signal processing for atmosphere and Earth surface monitoring by means of active systems. His activity started in 1988 at the Communications and Space Sciences Lab. of Penn State University for studies concerning radar polarimetry applied to ground weather radar systems. During his Ph.D., he focused on signal synthesis and coding for polarimetric radars, interference reduction and data redundancy exploitation, with particular reference to synthetic aperture radars. Later, besides continuing his research on ground weather radars, he focused on spaceborne weather radar (recently co-operating with NASA/JPL for the development of a dual frequency Doppler radar) and gave original contributions to the exploitation of attenuation measurements, made along transmitter-receiver (or transmitter-retroreflector-receiver) links in the microwave and infrared region. The applications span from the reconstruction and tracking of rainfall fields to estimating tropospheric water vapor.	
Languages: Italian, English, German, some French	

Coordinates: Dr. Luca Facheris
Dipartimento di Elettronica e Telecomunicazioni, Via di Santa Marta 3, 50139 Firenze, Italy
Tel: +39-055-4796274
Fax: +39-055-488883 or -494569
E-Mail: facheris@ingfi1.ing.unifi.it

Associated Science User Team Members at DET/UF:

Dr. Fabrizio Cuccoli

Born: 08/02/1970 *Nationality:* Italian

1996	M.Sc. degree (cum laude) at the University of Florence in Electronic Engineering, Italy
2001	Ph.D in "Methods and Techniques for environmental remote sensing"
2000 – present	Research Scientist for CNIT (Interuniversity National Consortium for Telecommunications) at DET/UF

Experience and Expertise: Since 1996 his research has been devoted to remote sensing of the troposphere using active systems for low-scale applications. His main interest is in data processing of attenuation measurements to retrieve the spatial distribution of the atmospheric parameters that cause the attenuation and in feasibility studies of active systems to perform attenuation measurements. The research activity in data processing has been in ad-hoc tomographic methods for ill-conditioned inversion problems and in minimization procedures for multi-frequency applications. The active systems that have been considered are microwave transmission-reception devices operating in 18-22 GHz for estimating tropospheric water vapor and infrared laser systems based on semiconductor diode laser for the measurement of the gaseous components of the atmosphere.

Languages: Italian, English.

Dr. Simone Tanelli

Born: 19/04/1970 *Nationality:* Italian

1995	M.Sc. degree (cum laude) at the University of Florence in Electronic Engineering
1999	Ph.D in "Methods and Techniques for environmental remote sensing"
1999 – present	Research assistant at DET/UF and visiting Post-Doc Fellow at NASA/JPL

Experience and Expertise: Since 1995 he has been involved in tomographic data processing methods for remote sensing of precipitation and atmospheric pollution. In particular, he developed methods for estimating and tracking two-dimensional fields of precipitation over limited areas covered by a limited number of transmitter-receiver links at microwaves. Later, he was involved in research on algorithms for tracking ground weather radars eachoes by multiscale correlation analysis. Since 1999 he is a visiting scientist at the Radar Science and Engineering Group of NASA/JPL, mainly involved in the design of a dual frequency Doppler (Ku-Ka bands) spaceborne radar and related signal processing algorithms. Recently, he started some research cooperation with a team of scientists of NASA/JPL on issues related to tropospheric water vapor measurements thrugh a multi-frequency attenuation measurement approach.

Languages: Italian, English

—

6.2.2.3 Purdue University, U.S.A. (PURDUE)

Interest in the Mission and Plans for Data Exploitation:

The ACE+ mission is important in that it will provide high resolution vertical profiles of water vapor in the upper troposphere where detection of small changes in the concentrations may have significant implications for climate change. The additional sensors in the 10, 17, and 23 GHz bands are key features that greatly enhance the mission over previous GNSS-only occultation missions. We anticipate being able to use the different types of occultation data sets to analyze the ability of a combined observation system to separate the effects of water vapor and temperature fields in order to reduce the error bars on detecting climate change.

Scientific Expertise at PURDUE:

Dr. Haase has worked on simulation studies of GNSS radio occultation from spaceborne and airborne platforms. She led the MAGIC European Community project that developed the methodology for ground-based GPS integrated water vapor retrieval, tested assimilation techniques, and investigated the use of this data in climate studies, which she worked on with Prof. Eric Calais. They are currently working with Prof. Wen-Yih Sun on assimilation of GNSS refractive delay measurements into NWP models. Through active collaborations with the ENVISAT team at ACRI-ST, France, they pursue opportunities for intercalibration of GNSS derived meaurements with water vapor and temperature measurements from GOMOS and MERIS instruments.

Science User Team Member of PURDUE — CV and Coordinates:

Dr. Jennifer S. Haase *Born:* 18/06/1963 *Nationality:* U.S.A.

1985	B.Sc. in Geophysics, California Institute of Technology, Pasadena, CA
1992	Ph.D. in Earth Science, Scripps Institution of Oceanography, Univ. of California
1993 – 1995	Research Fellow in Geophysics, California Institute of Technology, Pasadena, CA Topic: seismic tomography and finite difference waveform modeling
1996 – 2001	Scientific Researcher, ACRI-ST, France, Head of GPS Research and Development Section
2001– present	Research Associate, Purdue University, Indiana, U.S.A.
Experience and Expertise: Simulation studies of radio occultation observations from spaceborne and airborne sensors for error analysis and feasibility. Characterization of climatic variability of the atmosphere and the ability of GNSS occultation techniques to accurately sample representative structures. Application of GPS observations to mesoscale NWP convective precipitation problems. Previous expericence with providing expertise for algorithm requirements for radio occultation and other remote sensing missions.	
Languages: English, French	

Coordinates: Dr. Jennifer Haase
Dept. of Earth and Atmospheric Sciences
Purdue University
West Lafayette, IN 47906 USA
Tel: +1-765-494 1643
Fax: +1-765-496 1210
E-Mail: jhaase@purdue.edu

Associated Science User Team Members at PURDUE:

Prof. Eric Calais (Precise GPS techniques for geodynamics, kinematic GPS algorithms),
Prof. Wen-Yih Sun (NWP mesoscale model development and surface interaction models),
Prof. Harshvardan (Atmospheric remote sensing and cloud microphysics).

6.2.2.4 Communications Research Laboratory, Japan (CRL)

Interest in the Mission and Plans for Data Exploitation:

CRL is conducting an Arctic atmosphere observation program, called "CRL Alaska Project", in cooperation with University of Alaska. It involves nine kinds of atmospheric instruments covering dynamics, chemistry, and aurora/plasma processes, such as Rayleigh (+Doppler)/Mie lidars, MF/HF radars, microwave/infrared/visible spectrometers, etc. As part of such activity, CRL is starting development of a new radio occultation data analysis system in collaboration with Kyoto University. Retrieved humidity, temperature, and electron density will be used for cross-validation and comparative studies together with the Alaska atmospheric data as well as with the CRL space weather products.
Our experiments in Alaska also work as part of Arctic and global middle atmosphere observation network. The ACE+ mission and the ground-based experiments will provide excellent complementary data for larger horizontal coverage and more homogeneous spatial distribution of data for studies of dynamics (atmospheric waves and larger structures) and climatology of the whole middle atmosphere, as well as for studying effoects of solar influences onto middle-lower atmospheric variation. We are convinced that unique ideas of the ACE+ project, including LEO-LEO and use of GALILEO in addition to GPS signals, will contribute importantly to weather prediction and atmosphere/climate sciences all over the world.

Scientific Expertise at CRL:

Since it was founded in 1952 as the Radio Research Laboratory of the Ministry of Posts and Telecommunications (MPT), CRL has promoted comprehensive R&D in the fields of Info-Communications based on Radio and Photonic Research. In April 2001, CRL became independent of the Ministry of Public Management, Home Afairs, Posts and Telecommunications (formerly MPT) and was newly inaugurated as an independent institution designated the (new) CRL.
CRL's diversified research themes, including the core subject of communications, are conducted in the following four divisions: Information and Network System Division, Wireless Communications Division, Applied Research and Standards Division, and Basic and Advanced Research Division. In the Applied Research and Standards Division, many studies on remote sensing technology and atmospheric science are conducted, among them radio occultation research. We are glad about the possibility to become ACE+ team members.
For more information on CRL please visit http://www.crl.go.jp/overview/index.html.

Science User Team Member of CRL — CV and Coordinates:

Dr. Yasuhiro Murayama *Born:* 08/09/1964 *Nationality:* Japanese

1990	M.E., Radio Atmospheric Science Center, Kyoto University
1993	Ph.D., Radio Atmospheric Science Center, Kyoto University
1991–1993	Japan Society for the Promotion of Science (JSPS) Fellow at Kyoto University.,
1993–present	CRL, Associate Professor (concurrent post), Nat'l. Inst. of Polar Research (2000–present).
Experience and Expertise: Dr. Murayama's research field covers wide range of atmospheric dynamics, espesially observational studies of atmospheric waves and winds in altitude range of 20 to 100 km using MF radar, MST radar, Rayleigh lidar, rocket-borne foil-chaff. His 25 papers appeared in refereed journals. Since 1999 he is Group Leader (=Section Chief) of a CRL's Arctic atmosphere observation program in cooperation with University of Alaska (http://www.crl.go.jp/dk/c216/ScienceplanE).	
Languages: Japanese, and English.	

Coordinates: Dr. Yasuhiro Murayama
Group Leader, International Arctic Environment Research Project Group
Applied Research and Standards Division
Communications Research Laboratory
4-2-1 Nukui-kita, Koganei, Tokyo 183-8795, JAPAN.
Tel:+81-423-27 6685
Fax: +81-423-27 6678
E-mail: murayama@crl.go.jp

Associated Science User Team Members at CRL:

Mr. Kiyoshi Igarashi

Born: 09/02/1950 *Nationality:* Japanese

1972	B.Sc. Electrical Engineering, Ibaraki Univ., Japan
1974	M.Sc. Electrical Engineering, Osaka Univ., Japan
1974 – present	Join the Radio Research Laboratory, Ministry of Posts and Telecommunicatios (1974), Participate wintering party of Japanese Antarctic Research Expedition (1977-1979, 1981-1983), Visiting scientist at MPI for Aeronomie (1985-1986), Chief, Ionosheric observation section, Communicatios Research Laboratory (1988-1993), Chief, Upper atmosphere section, Communications Research Laboratory (1993-2001), Head, Resaerch Alliance Office, Strategic Planning Division, Communications Research Laboratory (2001- present).
Experience and Expertise: .K. Igarashi has started his research in 1974 on ionospheric irregularities by using his own developed ionopsheric sounders and investigated since 1988 on disturbances of ionosphere and atmosphere assosciated with aurora and volcano eruption (~30 international paper/reports), then focused since 1993 on coupling study of mesospehre and lower thermospehre uisng newly developed MF radar and VHF radar (~20 international paper/reports). Since 1998 he investigated global features of ionosphere and mesosphere by using GPS radio occultation data and supported ground based validation for Orsted satellite and so on (5 international papers/reports). He also works internationally as a convenor of URSI G6, Acting manager of World Data Center for Ionosphere, Tokyo and so on. At present he is involved in managing research cooperations as Head of Reserach Alliance Office at CRL.	
Languages: Japanese, English, some German	

Dr. Klemens Hocke

Born: 01/01/1964 *Nationality:* German

1991	M.Sc. Physics, Univ. Bochum, Germany
1994	Ph.D. Physics, Univ. Goettingen and MPI for Aeronomy, Katlenburg-Lindau, Germany
1994–2000	Scientist at MPI for Aeronomy, Univ. Graz, CRL Tokyo, DLR Neustrelitz, GFZ-Potsdam
2000–2001	Visiting Professor, Radio Science Center for Space and Atmosphere, Kyoto Univ.
Present	Guest Researcher of Telecommunications Advancement Organization at CRL, Tokyo
Experience and Expertise: Analysis of radar and GPS atmosphere sounding data, CHAMP project radio occultation data analysis system, 26 peer-reviewed articles about radio occultation, ionospheric/atmospheric dynamics, co-chair of Special Study Group "Spaceborne GNS Atmosphere Sounding" of the International Association of Geodesy (IAG).	
Languages: German, English, some Japanese	

—

6.2.2.5 Naval Research Laboratory, U.S.A. (NRL)

Interest in the Mission and Plans for Data Exploitation:

We are currently developing a program to assimilate GPS occultation data into the Naval Operational Global Atmospheric Prediction System (NOGAPS) and the Coupled Ocean/Atmosphere Mesoscale Prediction System (COAMPS). The assimilation tool will work within the NRL Atmospheric Variational Data Assimilation System (NAVDAS). Although initial tests of this assimilation system will be done with simulated data, we hope to eventually integrate real satellite data. Data from the ACE+ mission would provide a highly valuable dataset, which would allow us to test the value of both GPS-LEO and LEO-LEO occultation measurements on the NOGAPS and COAMPS forecasts.

Scientific Expertise at NRL:

The Naval Research Laboratory has expertise in radiative transfer, data assimilation, and weather prediction. Dr. Axel von Engeln has been working with the University of Graz EGOPS S/W system, which calculates a 3D ray tracing, and performed a statistical study of errors introduced by using a 1D (vertical) scheme to assimilate bending angles.

Science User Team Member of NRL — CV and Coordinates:

Dr. Gerald Nedoluha *Born:* 05/12/1960 *Nationality:* USA

1979 – 1983	B.A.,Physics, University of California, Berkeley
1983 – 1985	M.Sc., Physics, University of Illinois, Urbana
1985 – 1990	Ph.D., Physics, University of Illinois, Urbana
1990 – 1993	National Research Council Fellow, Naval Research Laboratory
1993 – present	Research Physicist, Naval Research Laboratory

Experience and Expertise:

Principal Investigator, Water Vapor Millimeter Wave Spectrometer project to measure water vapor at 22 GHz in the middle atmosphere (NASA funded). Co-Investigator, Data Assimilation for Mesoscal Prediction project (NRL funded). Principal Investigator, Determination of the Effect of GPS Occultation Measurements on Numerical Weather Prediction (NPOESS funded). Member of Network for the Detection of Stratospheric Change (NDSC) Steering Committee. Expertise in radiative transfer, middle atmospheric physics, and microwave measurements.

Languages: English, German, some French

Coordinates: Dr. Gerald Nedoluha
Naval Research Laboratory
Code 7227
Washington DC 20375
U.S.A.
Tel: +1-202-767 4246
Fax: +1-202-767 7885
E-mail: nedoluha@nrl.navy.mil

Associated Science User Team Member at NRL:

Dr. Axel von Engeln (occultation data-radiometer data synergy, assimilation of radio occultation measurements).

6.2.2.6 Geophysical Research Division, Finnish Meteorological Institute, Finland (GEO/FMI)

Interest in the Mission and Plans for Data Exploitation:

Space Weather research at FMI/GEO has been focused on the following three main issues: (1) monitoring network of space weather phenomena, (2) numerical simulation model of the magnetosphere-ionosphere system, and (3) studies of ground effects of space weather.
All these areas belong to basic research but they may also be applied to practical space weather studies. An important topic of GEO/FMI's interests directly related to the ACE+ mission are investigations of the relation of space weather with the atmosphere and with meteorological weather and climate. But ACE+ data would be of value for all areas.

Scientific Expertise at GEO/FMI:

FMI belongs to the leading European meteorological-geophysical centres, and GEO/FMI is leading or involved in many international research endeavors. A few projects shall be noted just as examples. Ground effects of space weather, i.e. geomagnetically induced currents in power systems and pipelines have been studied since the seventies together with Finnish industry. GEO/FMI has made preparatory studies for ESA in order to resolve the European capabilities in fields related to space weather. Currently studies focus on particular events in which data from the whole space weather chain from the sun to the ground are investigated.

Science User Team Member of GEO/FMI — CV and Coordinates:

Prof. Risto Pellinen *Born:* 21/01/1944 *Nationality:* Finnish

1966/ 1970	M.Sc. degree/ Ph.Lic. degree in theoretical physics, Univ. of Helsinki, Finland
1979/ 1985	Ph.D. degree in geophysics/ Docent in theorectical physics, Univ. of Helsinki
1972-1985	Senior Research Scientist, FMI, Helsinki
1985-1989	Chief of Aeronomy Division, Dept of Geophysics, FMI
1989-1991	Research Professor and Head of space programmes, FMI
1991-present	Head of Geophysical Research Division (formerly Dept of Geophysics), FMI
Experience and Expertise: Prof. Pellinen started his research on aeronomy, geophysics and space physics in 1972. He is the author of more than 140 scientific publications, mainly in the fields of auroral, magnetospheric and planetary physics. Besides, he has written a number of popular articles related to space research and participated in the production of TV documents, etc. Prof. Pellinen has belonged and belongs to many space science committees, both national and international and especially within ESA (e.g., Member of the Space Science Advisory Committee, Chair of the Solar System Working Group). He has led several extensive research activities and been the responsible scientist or director in many projects, including both satellite and ground-based observations, and topics cover magnetospheric physics, planetary science and atmospheric research.	
Languages: Finnish, Swedish, English, Norwegian, German, some French	

Coordinates: Prof. Risto Pellinen
Finnish Meteorological Institute, Geophysical Research Division
P.O. Box 503, FIN-00101 Helsinki, Finland
Tel: +358-9-1929 4600
Fax: +358-9-1929 4603
E-mail: risto.pellinen@fmi.fi

Associated Science User Team Members at GEO/FMI:

Dr. Risto Pirjola, Research Manager (space weather),
Dr. Erkki Kyrölä, Research Manager (atmospheric science),
Dr. Heikki Nevanlinna, Res. Manager (space weather effects on atmosphere & weather),
Dr. Ari Viljanen, Research Scientist (ground effects of space weather).

6.2.2.7 Electronics Dept., Politecnico of Turin, Italy (ELN/POLITO)

Interest in the Mission and Plans for Data Exploitation:

We are very interested in all tasks of the ACE+ mission, especially in the LEO-LEO and GALILEO-LEO radio occultation features. In particular, we are interested to exploit data for the characterization of the lower atmospheric layers, in the form of inverted or even just integrated data to be assimilated in numerical weather prediction models.

Scientific Expertise at ELN/POLITO:

Our group has scientific experience on radio wave propagation, remote sensing, radarmeteorology and development of numerical simulations. In particular we are involved in various national projects regarding past and future GPS-LEO occultation missions. Moreover, we are working on the retrievals of refractivity profiles from Earth-based GPS measurements.

Science User Team Members of ELN/POLITO — CV and Coordinates:

Prof. Giovanni Perona *Born:* 09/09/1939 *Nationality:* Italy

1962	Degree in electrical engineering from Politecnico di Torino, Italy (*summa cum laude*)
1965	M.Sc. in electrical engineering, Cornell University, U.S.A.
1968	Ph.D. in electrical engineering, Cornell University
1968 – 1978	Various teaching and research positions at the Politecnico of Turin, Italy
1978 – present	Full professor of remote sensing and radio wave propagation at the Politecnico of Turin
Experience and Expertise: The scientific activity is documented by more than one hundred publications in international journals and proceedings of international conferences in the field of applied electromagnetism and remote sensing. In 1991 he was an active promoter and first chairman of the European Association of Environmental Management Education (in response to an initiative of the European Parliament). He has been organizing formation activities in different managerial fields in cooperation with the European Union and the International Labor Organization (United Nations).	
Languages: Italian, English, some French	

Coordinates: Prof. Giovanni Perona
Politecnico di Torino – Electronics Dept.
Corso Duca degli Abruzzi, 24
I-10129 Torino, Italy
Tel: +39.011.5644067
Fax: +39.011.5647959
E-mail: perona@polito.it

Dr. Marco Gabella *Born:* 07/02/1966 *Nationality:* Italy

1991	Degree in electrical engineering from Politecnico di Torino, Italy
1995	Ph.D. in Remote Sensing
1995 – 1997	Post Doc Scientist – Fellowship at Politecnico di Turino
1997 – present	Assistant professor
Experience and Expertise: His fields of activities include electromagnetic wave propagation and remote sensing of the atmosphere at optical and microwave frequencies.. In 1996 he obtained a research contract under European Space Agency (ESTEC) contract. Together with G. Perona he organized – on behalf of the European Union Administration of Mostar (EUAM) – a two-week seminar entitled "GIS and the management of public utilities", devoted to engineers and managers involved in the reconstruction of the town. In 1998 he attended the EU short course "Radar hydrology for real time flood forecasting". His current main research activities concern weather radar data processing (in particular clutter elimination algorithms) and analysis (with one emphasis on rain fields evaluation).	
Languages: Italian, English	

Dr. Riccardo Notarpietro (radar meteorology, wave propagation, radio occultation).

6.2.2.8 University Corporation for Atmospheric Research, U.S.A. (UCAR)

Interest in the Mission and Plans for Data Exploitation:

UCAR has been involved in radio occultation science and missions since 1993 and led the pioneering proof-of-concept mission GPS/MET. We have a key interest in the methodology of the technique, the data inversion and the application of the data to numerical weather, climate, and space weather models. Improving our knowledge of the global distribution of atmospheric water vapour is of key importance to UCAR/NCAR scientists and the universities that we support. Realization of the ACE+ mission would provide, not least due to demonstrating LEO cross-link occultations, an innovative new dataset on water vapour.
The COSMIC program office at UCAR is establishing a data analysis center for radio occultation data. This is designed as a multi-mission center and we have a keen interest in obtaining the data from multiple radio occultation missions for near-real time and post-processed analysis. ACE+ measurements would represent a highly valuable data source for this center.

Scientific Expertise at UCAR:

Our team has experience in managing radio occultation missions, in orbit determination, in occultation data inversion, and data assimilation into numerical models (i.e., the MM5 model). While our expertise is focussed on radio occultation from GPS transmissions, UCAR and Jet Propulsion Laboratory (JPL) submitted a joint proposal to NASA in 1998 for a combined occultation/cross-link mission called COSMIC/AMORE.

Science User Team Member of UCAR — CV and Coordinates:

Dr. Christian Rocken *Born:* 23/01/1957 *Nationality:* German

1988	Ph.D. Geophysics, Univ. of Colorado, Boulder
1989-1991	Researcher at CIRES & CCAR, Faculty Univ. Colorado
1991-1996	Manager of R&D UNAVCO, Boulder
1997-2000	Program Manager GPS/MET Experiment
1996-present	Chief Scientist COSMIC and GPS Research Group Manager
Experience and Expertise: Dr. Rocken has used the GPS for scientific applications since 1985. He is one of the pioneers to use the GPS for atmospheric sensing and was one of the leading scientists in the GPS/MET experiment team. Dr. Rocken has authored or co-authored about 40 peer-reviewed papers and holds several U.S. patents.	
Languages: German, English	

Coordinates: Dr. Christian Rocken
P.O. Box 3000
Boulder, CO 80307-3000
USA
Tel: +1-303-497 8012
Fax: +1-303-497 2610
E-mail: rocken@ucar.edu

Associated Science User Team Members at UCAR:

Dr. Sergey Sokolovskiy (Radio occultation science, wave propagation, GPS),
Dr. Y.H. Kuo (Meteorology, data assimilation, GPS radio occultation),
Dr. Bill Schreiner (Orbit determination, GPS/MET retrieval error analysis),
Mr. Doug Hunt (Automated radio occultation processing system software design).

6.2.2.9 Institute of Atmospheric Physics, Univ. of Arizona, U.S.A. (IAP/UA)

Interest in the Mission and Plans for Data Exploitation:

ACE+ is a promising concept that potentially can improve on our knowledge about the state of the atmosphere, and contribute to the improvement of weather forecasts in the future. The very high vertical resolution of radio occultation data products is not matched by any other remote sensing technique. The global distribution of tropospheric water vapour from the LEO–LEO measurements would also be very important for the study and understanding of the global water and energy cycles.
At IAP/UA we are interested in the retrieval algorithm developments and error analyses as well as using the data products in various areas of research: boundary layer; data assimilation; global water vapour; climate change; ionosphere.

Scientific Expertise at IAP/UA:

The team at IAP/UA has a broad expertise in remote sensing techniques. Dr. Herman was one of the leaders of the proof-of-concept GPS/MET experiment in 1995, and Dr. Kursinski has been one of the leading scientists worldwide in the radio occultation technique since 1990. Individually, the team members have developed several inversion and retrieval codes for remote sensing problems. The team is currently leading the pre-developments of the NASA ATOMS (Active Tropospheric Ozone and Moisture Sounder) instrument and related data retrieval algorithms in co-operation with scientists at the Jet Propulsion Laboratory.

Science User Team Member of IAP/UA — CV and Coordinates:

Dr. Stig Syndergaard *Born:* 29/12/1962 *Nationality:* Danish

1990	B.Sc. Geophysics, University of Copenhagen, Denmark
1995	M.Sc. Geophysics, Univ. of Copenhagen
1999	Ph.D. Natural Sciences, Univ. of Copenhagen
1995–2000	Research Scientist, Danish Meteorological Institute, Copenhagen, Denmark
2000–present	Research Associate, IAP/UA, Tucson, AZ, U.S.A.
Experience and Expertise: Dr. Syndergaard has 7 years of experience working with the radio occultation technique at the Danish Meteorological Institute (DMI) and since 2000 at the IAP/UA. He has developed several occultation ray-tracing algorithms and data retrieval codes under contract with the European Space Agency while working at DMI, as well as been responsible for the development of the retrieval algorithms for the Ørsted–GPS occultation data analysis in 1999. He is now involved in the development of ATOMS (LEO–LEO absorption measurements) retrieval algorithms and error analysis, and also has interest in radio occultation data assimilation issues as well as ionospheric tomography using GNSS occultation data.	
Languages: Danish, English	

Coordinates: Dr. Stig Syndergaard
Institute of Atmospheric Physics, The University of Arizona
P.O. Box 210081, Tucson, AZ 85721-0081
Tel: +1-520-621 6840
Fax: +1-520-621 6833
E-mail: ssy@atmo.arizona.edu

Associated Science User Team Members at IAP/UA:

Prof. Benjamin Herman (radiative transfer, aerosols and clouds, GPS/MET),
Dr. Robert Kursinski (occultation technique, instrumentation and analysis),
Dr. David Flittner (limb scattering retrieval), **Dr. Dale Ward** (SAGE occultation retrieval),
Dr. Dasheng Feng (GPS/MET and ATOMS retrieval algorithms).

6.2.2.10 Radio Science Center for Space and Atmosphere, Kyoto University, Japan (RASC)

Interest in the Mission and Plans for Data Exploitation:

We have been studying various characteristics of the Earth's atmosphere and ionosphere using datasets with GPS occultation measurements provided from the GPS/MET, CHAMP and SAC-C projects. We are also promoting a future project on application of GPS occultation techniques in collaboration with scientists within Japan as well as the Brazilian space agency (INPE). In particular, we are planning to clarify the behavior of equatorial atmosphere dynamics. As radio occultation measurements provide accurate profiles of water vapor, temperature and electron density with good height resolution, they are essentially important in our study. The ACE+ mission has the potential to provide an unique dataset to this end.

Scientific Expertise at RASC:

RASC has been operating an integrated atmosphere observatory in Shigaraki, Japan (35N, 136E) by using various in-situ and remote sensing techniques. Especially, since 1984 the MU (middle and upper atmosphere) radar at 50 MHz has been measuring profiles of wind velocity, temperature and ionospheric parameters at 1 to 400 km. In addition, Rayleigh, resonance, and Raman lidars are employed. We have also established remote observatories in Indonesia, installing a number of radio and optical instruments.

Science User Team Member of RASC — CV and Coordinates:

Prof. Toshitaka Tsuda *Born:* 03/10/1952 *Nationality:* Japanese

1971 – 1977	Studies at the Kyoto University, Japan
1975/ 1977	Batchelor Eng./ M. Eng. from Kyoto Univ.
1982	Dr. Eng. from Kyoto Univ.
1977 – present	Assistant Professor (1977), Faculty of Eng., Kyoto Univ.; Associate Professor (1987), RASC, Kyoto Univ.; Professor (1995), RASC, Kyoto Univ.
Experience and Expertise: Prof. Tsuda has been working on radar remote-sensing of the middle atmosphere. In particular, he has studied detailed characteristics of atmospheric waves; tides, planetary waves, gravity waves and equatorial waves, and authored/co-authored more than 200 papers in international journals. He served as a science secretary of ICMA (International Commision of Middle Atmosphere) of IAMAS during 1995-2001, and is now appointed at the Bureau of SCOSTEP as a representative of IAMAS since 2001.	
Languages: Japanese, English, Indonesian	

Coordinates: Prof. Toshitaka Tsuda
Radio Science Center for Space and Atmosphere, Kyoto University
Uji, Kyoto 611-0011, Japan
Tel: +81-774-38 3804
Fax: +81-774-31 8463
E-Mail: tsuda@kurasc.kyoto-u.ac.jp

Associated Science User Team Members at RASC:

Dr. Yuichi Aoyama (Data analysis of GPS occultation measurements),
Dr. Ashraf Mousa (Down looking GPS occultation measurements from mountain top),
Dr. Takayuki Yoshihara (GPS water vapor tomography).

6.2.2.11 Space Research Centre, Polish Acad. of Sciences, Poland (SRC)

Interest in the Mission and Plans for Data Exploitation:

The scintillation measurements in the radio occultation experiment will provide an unique opportunity to study atmospheric and ionospheric turbulence. Multi-frequency amplitude measurements (L- and X/K-band) are of particular interest. Unlike the ground-based scintillation measurements, the ACE+ experiment will let us to study the vertical distribution of the turbulence parameters. The experiment will enable us to test for the importance of interactions between the atmospheric and ionospheric turbulence. We also expect to study acoustic-gravity waves in the atmosphere and their role in the generation of turbulence.

Scientific Expertise at SRC:

For over 30 years the SRC team has been involved in radio wave scintillation studies. Over 30 original papers and reviews have been published. The team is also experienced in the data analysis, including advanced methods (wavelet transform, higher order statistics, and nonlinear dynamics). The interest in the interactions between atmospheric gravity waves and ionospheric plasma resulted in 4 papers.

Science User Team Member of SRC — CV and Coordinates:

Prof. Andrzej W. Wernik *Born:* 26/11/1938 *Nationality:* Polish

1955 – 1960	Studies at the Warsaw University
1960	M.Sc. in Astronomy, Warsaw Univ.
1968/ 1978	Ph.D. in Geophysics/ Doctor habilitatus in Physics, Warsaw Univ.
1989	Professor of Physics title awarded by the President of the Republic of Poland
1960 – 1977	In the Institute of Geophysics: Research assistant, Research associate, Head of the Ionospheric Physics Lab.
1977 – present	In the Space Research Center: Assistant professor, professor (present), Head of the Radiophysics Lab.; at the University of Illinois, Urbana, IL, USA: Assistant professor 1979, Associate professor 1981-1983, 1988; at the National Central University, Chung-Li, Taiwan: Visiting scholar, 1993; Chairman of the URSI Comm. G, 1990-1993; Vice President of URSI, 1999-present; Associate editor of „Radio Science“, 1993-2000; Member of the Bureau of SCOSTEP, 1996-1999; Co-chairman of the URSI Working Group „Waves and Turbulence Analysis“, 1996-present.
Experience and Expertise: Since 1960 conducts research on wave propagation and ionospheric physics. Main interest in ionospheric scintillation and turbulence. Profound experience in statistical data analysis. Over 80 papers published, 4 Ph.D. students promoted. Invited speaker at several international schools and conferences. Organizer of several conferences and topical sessions.	
Languages: Polish, English, Russian	

Coordinates: Prof. Andrzej W. Wernik
Space Research Center, Polish Academy of Sciences
ul. Bartycka 18a, 00-716 Warsaw
Poland
Tel: +48-22-8403766, ext. 379
Fax:+48-22-8403131
E-mail: aww@cbk.waw.pl

Associated Science User Team Member at SRC:

Mr. Marcin Grzesiak (data analysis, modelling of turbulence).

6.2.2.12 Inst. of Radio Engineering and Electronics, Russ. Acad. of Sciences, Russia (IRE/RAS)

Interest in the Mission and Plans for Data Exploitation:

We are very interested in the proposal for an "Atmosphere and Climate Explorer based on GPS, GALILEO, and LEO-LEO radio occultation." Active radio sounding of the atmosphere and ionosphere are among the most promising techniques that emerged in Earth remote sensing. System concept and mission elements of the proposed mission (4 micro-satellites for providing radio occultation experiments in L-band (two frequencies) and X/K band (3 frequencies)) allow to yield global measurements, with unprecedented accuracy and vertical resolution of such quantities as atmospheric refractivity, absorption, density, pressure, temperature, moisture, and geopotential height. Global observations of these parameters, including humidity and temperature in the troposphere and stratosphere, are important for monitoring climatic variations and trends at different vertical levels and for each season, and for revealing characteristics of natural processes in the atmosphere. In summary, we fully support the objectives of the ACE+ mission and are glad to join the Science User Team.
We are interesting in joint analysis of radio occultation signals in decimeter and centimeter bands for retrieving vertical gradients of temperature, humidity and (if possible) electron density in lower ionosphere and in recovering connections between natural processes in the troposphere and stratosphere using the following data products of the ACE+ mission: profiles of refractivity, absorption, temperature, and pressure as function of height.

Scientific Expertise at IRE/RAS:

Since many years our team further develops the radio occultation method as applied to monitoring of the atmosphere and ionosphere of the Earth using radio links satellite-to-satellite. We carried out pioneering experiments using radio links orbital station MIR-geostationary satellites at 32 cm and 2 cm, respectively. We derived and verified with our German and Japanese colleagues the radio holographic approach for achieving extreme resolution and accuracy of vertical profiles of atmospheric and ionospheric parameters using GPS/MET radio occultation data.

Science User Team Members of IRE/RAS — CV and Coordinates:

Prof. Oleg I. Yakovlev *Born*: 24/05/1929 *Nationality: Russian*

1947-1952	Studies at the Irkutsk University, Russia
1952-1958	Research Scientist at the Sibirian Physical and Technical Institute
1957	Ph.D. degree (highest honours) in Physics
1958-1960	Senior Research Scientist at the Nizhny Novgorod University
1960-1999	Head of Department at the IRE/RAS, Moscow
1999-present	Principal Research Scientist at the IRE/RAS, Moscow
Experience and Expertise: Prof. Yakovlev has started his research in 1952 on topics of antenna engineering and radio wave propagation and focused since 1966 on bistatic radar of celestial bodies, radio occultation investigation of planetary atmospheres and ionospheres and radio sounding of circumsolar plasma. He was scientific leader of radiophysical experiments carried out by means of the Russian spacecraft, including MIR-based radio occultation experiments. He has authored 5 books. For investigations in space radio science he was awarded in 1974 and 1985 a State Prize of USSR. In 1989 the Russian Academy of Sciences awarded him the A.S. Popov Prize. He is full member of the International Academy of Astronautics.	
Languages: Russian, English	

Coordinates: Prof. Oleg I. Yakovlev
Institute Radio Engineering and Electronics, Russian Academy of Sciences
Vvedenskogo sq. 1, 141191 Fryazino, Moscow Region, Russia
Tel: +7-95-526 9261, Fax: +7-95-203 8414 or +7-95-702 9572

Dr. Alexander G. Pavelyev

Born: 06/11/1938 *Nationality:* Russian

1956-1961	Studies at the Nizhny Novgorod University, Russia
1961	M.Sc.Radio Physics, Nizhny Novgorod Univ.
1969	Ph.D. Radio Science, Nizhny Novgorod Univ.
1977	Associate Professor
1999-2000	TAO and STA fellowship, CRL, Japan
2000-2001	Visiting Professor Kyoto University, RASC, Japan
2000-present	Head of Laboratory at IRE/RAS, Moscow, Russia

Experience and Expertise: Dr. A.G. Pavelyev has started his research in topics of scattering of radio waves and thermal radio emission of rough surfaces (~20 international papers). He provided experiments of bistatic radio location of Venus atmosphere and surface (1975, 1983), Sun (1984), Earth atmosphere and surface (1989-1998) (~20 international papers/reports in these fields). He derived new analytic approach for solution inverse problems of remote sensing (1985-1991) (5 international papers). He derived with German and Japanese colleagues radio holographic approach for achieving extreme resolution and accuracy in inversion of radio occultation data (1998-2001) (5 international papers).

Languages: Russian, English, German

Coordinates: Dr. Alexander G. Pavelyev
Institute Radio Engineering and Electronics, Russian Academy of Sciences
Vvedenskogo sq., 1,
141191 Fryazino, Moscow Region
Russia
Tel: +7-95-526 9261
Fax: +7-95-203 8414
E-mail: pvlv@ms.ire.rssi.ru or agp117@ire216.msk.su

Dr. Stanislav Matyugov

Born: 12/07/1944 *Nationality:* Russian

1961-1966	Studies at the Nizhny Novgorod University, Russia
1975	Ph.D. degree (highest honours) in Radio Science
1966-present	Research Scientist (1966-1977), Senior Research Scientist (1977-1987), Lidear Research Scientist at the IRE/RAS, Moscow, Russia

Experience and Expertise: Dr. S. Matyugov has started his research on topics of bistatic radar of Moon, and radio occultation investigation of planetary atmospheres and ionospheres. He has acquired a wide experimental experience in atmospheric research. For investigation of the Venus atmosphere he was awarded in 1985 a State Prize of USSR.

Languages: Russian, English

Coordinates: Dr. Stanislav Matyugov
Institute Radio Engineering and Electronics, Russian Academy of Sciences
Vvedenskogo sq. 1, 141191 Fryazino, Moscow Region, Russia
Tel: +7-95-526 9261, Fax: +7-95-203 8414

—

6.3 Industrial Consortium

6.3.1 Industrial Consortium Coordinators

Names:	Mr. Finn Hass and Mr. Jens Guldberg
Affiliation:	Space Division, TERMA Elektronik A/S
Address:	Bregnerødvej 144 DK-3460 Birkerød
Country:	Denmark
Telephone:	+45-45-949 610
Fax:	+45-45-949 699
E-mails:	fah@terma.com and jeg@terma.com

6.3.2 Industrial Consortium Overview

TERMA and SSC (Swedish Space Corporation) will be heading the mission level system engineering with SSC responsible for the platform design, EM and PFM development and TERMA responsible for the ground system development.

SSC will be assisted by TERMA, FOKKER, APCO, PATRIA (Finavitec) and possibly ALCATEL concerning data handling, Power system/solar-panels/mechanisms, structure, power distribution and AOCS, respectively. During the FM production and integration ALCATEL and/or FOKKER will take over the satellite integration and testing work.

TERMA will be assisted by DMI and by IGAM/UG for the development of ground segment processing algorithms.

The Instrument development is the responsibility of SES (Saab-Ericsson Space) with ALCATEL as subsystem provider for the CALL instrument. SES is assisted by AAE (Austrian Aerospace) for the data processing part.

A system level engineering team headed by TERMA and SSC will monitor the development throughout the project.

The following sections contain:

- List of participants, addresses and communication coordinates (includes explanation of company/institute acronyms) and distribution of responsibilities
- Overview on relevant experience and background (company profiles)

6.3.3 Industrial Consortium Members

Table 6.2 shows the list of companies in the industrial consortium capable and prepared to perform the ACE+ mission.

Name	Affiliation	Address	Communication
Finn Hass Jens Guldberg (Coordinators)	TERMA Elektronik A/S (Terma)	Bregnerødvej 144 DK-3460 Birkerød Denmark	Tel: +45-45-949 610 Fax: +45-45-949 699 fah@terma.com jeg@terma.com
Kaj Lunddahl Sytze Veldman	Swedish Space Corporation (SSC)	Albygatan 107 S-17104 Solna Sweden	Tel: +46-8-627 62 00 Fax: +46-8-98 70 69 kaj@ssc.se syv@ssc.se
Yvan Baillion David Mimoun	Alcatel Space Industries (Alactel)	Alcatel Space Industries – OS/AS/A 26, Av JF Champollion BP1187 F-31037 Toulouse Cedex 1 France	Tel : +33 (0)5 34 35 64 49 Fax: +33 (0)5 34 35 61 63 yvan.baillion@space.alcatel.fr david.mimoun@space.alcatel.fr
Magnus Bonnedal Hans Fritz	Saab- Ericsson Space (SES)	S-405 15 Göteborg Sweden	Tel: +46-31-335 4366 Fax: +46-31-335 9520 magnus.bonnedal@space.se hans.fritz@space.se
G. Grommers Q.T. Vo	Fokker Space B.V. (Fokker)	P.O. Box 32070 NL-2303 DB Leiden Netherlands	phone : +31-71-524 5236 fax : +31-71-524 5299 g.grommers@fokkerspace.nl q.vo@fokkerspace.nl
Jari Stenberg	Patria Finavitec	Naulakatu 3 FIN-33100 Tampere Finland	Tel: +358-3-2450 111 Fax: +358-3-2450 231 jari.stenberg@patria.fi
Manfred Sust	Austrian Aero- space GmbH (AAE)	Breitenfurter Strasse 106 A-1120 Vienna Austria	Tel: +43-1-80199 5756 Fax: +43-1-80199 6950 manfred.sust@space.at
Michel Garcia Christophe Jordan	APCO Techno- logies SA	Avenue de Corsier 1 P.O. Box 59 CH-1800 Vevey Switzerland	Tel: +41-21-922 1122 Fax: +41-21-922 1126 business@apco-technologies.ch

Table 6.2: Industry Consortium — Contact Points and Coordinates

Key responsibilities within the industrial consortium are tentatively defined as in the table below. It displays the presently foreseen assignment of companies for the phase A and phase B/C/D/E. As the Proposer's institutions, DMI and IGAM/UG, are integrated in the data processing & product distribution part, they are also listed here together with the consortium.

Item	**TERMA**	**SSC**	**SES**	**FOKKER**	**ALCATEL**	**PATRIA**	**APCO**	**AAE**	**DMI**	**IGAM/UG**
Instrument										
Overall system engineering			X							
GRAS+ development & AIV			X							
CALL development & AIV			X		X					
Processing Algorithms			X					X		
Instruments overall AIV			X							
Platform										
Overall System Eng.		X								
Subsystems spec. & procurement in general		X	X							
Structure & structure analysis		X)	X)	X			X			
Mechanisms				X						
Launcher adaptation/separation			X	X)			X)			
Data Handling	X	X								
Communication		X								
AOCS		X			(X)					
Power System & Solar Panels				X						
Power Conditioning & Distribution						X				
Thermal control system				X						
Platform AIV:EM/PFM		X								
Platform AIV : FM's (may use test facilities elsewhere, e.g. Germany, ESTEC)				(X)	X					
Launcher (Russian, Russian/German, or Chinese provider): Definition and preparation		X								
Ground segment development										
Overall System Engineering	X									
Tracking Stations & TM&TC Communication as procured service		X								
Mission Control Centre (may be allocated to ESOC)	X									
Data Processing & Product Distribution, Development & AIV	X								X	X
Operations										
Tracking Stations & TM&TC Communication as procured service		X								
Mission control (may be allocated to ESOC)	X									
Data Processing & Distribution	X									

Assignment: X = Full Assignment, X) = Involvement through interface, (X) = Alternative

Table 6-3 : Industrial Consortium – Distribution of Responsibilities

The following pages provide company profiles of all eight companies involved in the Industrial Team, ordered in line with the list in Table 6.2 as follows:

- **TERMA Elektronik** A/S, Birkerød, Denmark (Terma)
- **Swedish Space Corporation**, Solna, Sweden (SSC)
- **Alcatel Space Industries**, Toulouse, France (Alcatel)
- **Saab Ericsson Space** AB, Göteborg, Sweden (SES)
- **Fokker Space** B.V., Leiden, Netherlands (Fokker)
- **Patria Finavitec**, Tampere, Finland (Patria)
- **Austrian Aerospace**, Vienna, Austria (AAE)
- **APCO Technologies** SA, Switzerland (APCO)

6.3.3.1 TERMA Elektronik A/S, Birkerød, Denmark (Terma)

TERMA is an aerospace and defence contractor established in 1944, specialising in systems integration, radar equipment, advanced electronics and software. The company is wholly owned by the Thomas B. Thrige Foundation and has a staff complement of approximately 850. The turnover for 2000/2001 is around 120 million EUR, with a pre-tax profit of 6 million EUR.
The Air Defence Systems Division has developed Command, Control and Communication systems that are being deployed and maintained for Danish Army and Airforce as well as for the Austrian Army.
The Naval and Communications Systems Division has developed Command, Control, Communication and Information Systems, which have been integrated and installed on the Danish Standard Flex 300 multi-role ships and in submarines. The systems are presently being upgraded.
The Radar Systems Division produces radar based surveillance systems for traffic monitoring in coastal waters and for monitoring harbour operations. Furthermore, it provides a suite of products for Air Traffic Control systems around the Globe.
The Aerospace Division develops and maintains a series of electronic products for aircraft applications as well as tactical reconnaissance system for F-16 aircraft.
The Space Division deals with a range of European Research Establishments, in particular those of the European Space Agency (ESA). The Space division deals with on- board embedded s/w and s/w validation, satellite checkout control equipment and satellite ground systems including Earth observation**.** The division has developed a range of system and engineering service capabilities including a range of SCADA systems.
The Manufacturing Division provides a central manufacturing facility for electronic products for all the divisions. The division also operates a NATO Programmes and Service Centre, which supports maintenance of TERMA's own products as well as systems delivered by other major electronics companies.

A brief introduction to the individual divisions may be found on TERMA's Web page http://www.terma.com.

TERMA Space Division

Key clients of the Space Division are European Space Agency with its centres in Holland, Germany and Italy, the Joint Research Centre of the European Commission at Ispra, EUMETSAT and the European Southern Observatory in Germany.
The division has a staff of 170 and is located in offices in Birkerød and Lystrup (Denmark), Leiden (Holland), Weiterstadt (Germany) and Besozzo (Italy).
The division provides turnkey software systems for various applications including a range of systems for control and supervision purposes. The division also undertakes software development projects to implement other types of data processing facilities, and participates in the overall development of software technology.
In addition to these project capabilities the division delivers engineering support and services including facility management to its various customers.
An overview of the activities of the division is given in the sections below:

Control Equipment for Satellite Checkout: For these particular types of SCADA systems TERMA is the leading independent European supplier of integrated Electrical Ground Support Equipment (EGSE) for functional performance testing of complete satellites. These systems are addressing functional control during all levels of assembly, integration testing and

verification (AIT/AIV) including both the instrument payload and the satellite platform. Examples of activities are:

- Delivery of turnkey system and AIT/AIV support for ESA missions such as ERS-1 and 2, the Polar Platform, ENVISAT-1, CLUSTER and Meteosat Second Generation satellite.
- Supply of turnkey system for the Chinese-Brazilian Earth Resources Satellite (CBERS).
- Current activities include development of turnkey systems for the ESA's scientific ROSETTA satellite as well as for the avionics part of the Advanced Transfer Vehicle (part of the International Space Station programme).

Ground Systems for Satellite Operations: TERMA has a broad experience in the areas of mission and launch control centres. Activities range from studies and technology development, through to the design, implementation and operation of turnkey systems. Examples on SCADA systems developed for these kinds of activities are:

- Continued development and enhancement of SCOS 2000, ESA´s distributed spacecraft control infrastructure for which TERMA is prime contractor.
- Utilisation of the SCOS-2000 control systems infrastructure for the HUYGENS, Meteosat 7 and TeamSat missions.
- Development of the control software for the ARIANE launch control centre at Kourou, French Guyana, supporting ARIANE-5.
- Current developments include the satellite control centre for ESA's Integral mission and Commercial-Off-The-Shelf (COTS) products related to the control systems domain.

On-board Software and Software Validation Facilities: TERMA has become an acknowledged specialist in mission critical control software for use on board satellites and for manned space missions. Activities range from studies and technology development, through to the design and implementation of operational software. Independent software validation and the supply of software validation facilities are additional parts of the business in this domain. Examples of activities are:

- Development of on-board control software for managing the services to the various satellite subsystems.
- Participation in the ERA project developing key parts of the software controlling the European Robotic Arm.
- Delivery of software validation facilities for ESA's XMM, Integral, Envisat and METOP satellites.
- Independent software validation of the Envisat Payload Management Facility.

Small Satellites and Subsystems: TERMA provides design, development, manufacturing, as well as test and integration for small satellite missions. Examples of activities are:

- The Danish Ørsted satellite for which TERMA was leading a consortium of industrial companies and research institutes.
- The phase-A study for the Geomagnetic Space Observatory, one of ESA´s Earth explorer missions. The study was commissioned by the Agency's Earth Observation Preparatory Programme.
- RØMER is a new Danish small satellite to be used for investigation of internal structures of near-by solar-like stars based on stellar seismology. Terma is heading the industrial design team for this satellite with a planned launch date in 2005.

Earth Observation and User Services: TERMA activities in this area cover a range of products including archive and retrieval systems, as well as query facilities for multiple database systems. Examples of activities are:

- Turnkey delivery of the Meteorological Archive and Retrieval Facility (MARF) for EUMETSAT´s Meteosat Transition Programme.
- Implementation of the Dictionary and User Profile services for the Centre of Earth Observation Enabling Services located at CEC´s Joint Research Centre in Italy.
- The DINOCAT (Demonstrator for Interoperability of Oceanographic Catalogues) project building a demonstrator that provides a uniform query facility for searching on multiple oceanographic database catalogues.
- Study and development activities in the field of atmospheric profiling utilising radio occultation techniques. This includes development of tools in support of high precision orbit determination for LEO's based on GPS measurements, Clock correction in large satellite and ground station networks, and the establishment of processing chains on ground. This includes the ESA projects APEW and ACE, the US IPO project GPSOS, and the EU project CLIMAP.

6.3.3.2 Swedish Space Corporation, Solna, Sweden (SSC)

The Swedish Space Corporation (SSC) is a government-owned limited company under the Ministry of Trade and Commerce with activities covering the entire range of space-related work from feasibility studies to operational applications of space technology. SSC was set up by Parliament for the technical implementation of Sweden's national space and remote sensing programmes.
Systems engineering and management are the major activities of the company, but SSC also designs and develops high-technology hardware and software in-house. SSC's experience in space technology goes back to 1961. In 2000 the company had a total turnover of 397 million Swedish Crowns (1 US dollar ≈ 10,5 Swedish Crowns) and 300 employees. The president of SSC is Mr Claes-Göran Borg. The principal business areas of SSC are:

- design and development of small satellites, sounding rocket and balloon systems for space science and applications.
- launching of sounding rockets and balloons from the ESRANGE sounding rocket range in Kiruna in northern Sweden.
- telecommunications services (using the TELE-X and SIRIUS geostationary satellites; these services are carried out as part of SSC's role as shareholder in the Nordic Satellite Company).
- specification, procurement and operation of geostationary telecommunications satellites.
- in-orbit operations of satellites, including TT&C services both during launch phases and for satellites in orbit; data reception and data dissemination from orbiting satellites.

Of particular interest for this proposal are the following activities of SSC:

- design and development of small satellites for space research; Freja (launched in 1992), Astrid-1 (launched in 1995), Astrid-2 (launched in 1998), Odin (launched in 2001) and SMART-1 (launch planned late 2002).
- specification and procurement of satellites. This includes overall project responsibility for the Direct Broadcasting and Business Communications satellites TELE-X (launched in 1989) and Sirius-2 (launched in 1997) and the Viking scientific satellite project (launched in 1986);
- design and development of sounding rocket systems for space science and applications (microgravity).
- in-orbit operations of the TELE-X and Sirius series of geostationary satellites as well as the Freja, Astrid and Odin scientific satellites.

SSC has work sites both in Kiruna in northern Sweden where the rocket base and ground station ESRANGE is located and in Solna, a suburb of the capital Stockholm. SSC has four divisions: ESRANGE, Satellite Operations, Airborne Systems and Space Systems.

The Space Systems Division is located in Solna, Sweden and designs and build systems and subsystems for space research and other space projects and we provide flight services on sounding rockets. The largest customers are the Swedish National Space Board and the European Space Agency. The division has a staff of seventy-five (as of June 1, 2001), mostly with engineering degrees. The general manager of the Science Systems Division is Mr Gierth Olsson (gol@ssc.se). The division supplies the following products and services:

- Small satellites and microsatellites:

SMART-1 is a probe with destination to the Moon with SSC's Space Systems Division as the prime contractor for the European Space Agency's (ESA). In addition SSC is responsible for the system engineering, the development of the onboard system unit based on the CAN (Controller Area Network) protocol and the star tracker based attitude control system. The launch of SMART-1 is planned for late 2002.
SMART-1 is the first of ESA's Small Missions for Advanced Research and Technology (SMART). SMART-1 will be the first European spacecraft to travel to and orbit the Moon. The main mission objective of SMART-1 is to demonstrate innovative and key technologies for scientific deep-space missions. One of the objective is the flight demonstration of Electric Primary Propulsion as the primary means of propulsion in a Deep-Space mission, more specifically for the ESA Mercury Orbiter Mission, scheduled for launch in 2001. However, SMART-1 contains other technology elements both in the spacecraft bus and in the instruments carried onboard. The spacecraft will also carry a scientifically relevant payload.
The main avionics unit (onboard system unit) is presently being tested at SSC's Solna laboratories. A test bench with representative models or simulators of all spacecraft units is used to test interfaces and functional requirements. A Structural Test Model (STM) has successfully been tested during summer 2001. The technology developed for SMART-1 forms the basis for the platform that SSC proposes for ACE+.

Odin was developed by SSC's Space Systems Division under contract from the Swedish National Space Board in co-operation with the space agencies in Canada, France and Finland. Odin has a twofold mission to study the Earth's atmosphere and astronomical objects, tasks that require a very advanced attitude control system (developed by Space Systems Division). Odin was launched into a 600 km sunsynchronous orbit on a Russian Start-1 vehicle from Svobodny, Siberia on February 20 this year. Since March the satellite has produced atmospheric and astronomical data for the scientists. The lifetime is two years. Odin weighs 250 kg, is 2 m high and 4 m in diameter in orbit.

Astrid-2 is a spin-stabilised microsatellite and weighs 30 kg. The scientific mission is to measure electrical and magnetic fields. It was launched on December 10, 1998. Astrid-2 is equipped with a highly advanced autonomous star imager, which is currently the baseline on more than 30 NASA missions including the Pluto Express.
Astrid-1 is a spin-stabilised micro satellite weighing 27 kg launched on January 24, 1995. It is Sweden's third scientific satellite and first micro satellite. It was built by SSC from first concept to launch in 15 months! Astrid-1 carries an Energetic Neutral Atom analyser, a "first-time ever" in space, an Electron Spectrometer and two UV imagers for imaging the aurora.

Freja was launched on October 6, 1992, and was designed to continue the research started by Viking. It was the first satellite to make high resolution measurements in the upper ionosphere and lower magnetosphere of the auroral zone. Freja weighs 214 kg in orbit and is spin-stabilised. Freja out-lived its one-year design lifetime by a factor of four and yielded a highly valuable scientific return. The cost-effectiveness of Freja has received international acclaim; a long chapter about Freja is included in the book "Reducing Space Mission Cost" (Edited by J.R Wertz and W.J. Larson, Kluwer Academic Publishers/microcosm, 1996; ISBN 0-7923-4021-3) sponsored by the U.S. Air Force Academy.

In the development of the satellites of SSC's own design, many equipment subcontractors have been from outside Sweden. We have extensive experience in handling subcontractors in the USA, France, Germany, UK, Canada and China. SSC also has long experience in working with launch service suppliers such as Arianespace, China Great Wall Industry Corporation, STC Complex (Russia) and AKO Polyot (Russia).

- Microgravity experiments for use on sounding rockets and orbital vehicles. SSC has developed experiments for materials science, fluid physics and biology on behalf of the European Space Agency.
- Subsystems and equipment for satellite and sounding rocket systems;
  A recent development by SSC's Science Systems Division is a ***fiber-optic gyro*** mounted on a de-spun platform on a spinning sounding rocket. This system was tested successfully on an Orion sounding rocket launched to 94 km altitude on June 4, 1997 and also successfully launched in an operational flight onboard a Nike-Orion sounding rocket to 134 km on March 3, 1998.
  Another example of such a subsystem is the ***Telescience Support Unit*** (telemetry and onboard data handling system) for microgravity on board the Russian Foton satellite that SSC was developed for the European Space Agency. The first launch of this system will took place in 1999 and the second launch will take place in October 2002.
- Sounding rocket payload systems and entire vehicles. SSC has built about sixty sounding rocket vehicle systems over two decades. The most remarkable of these systems is the MAXUS microgravity sounding rocket based on the Castor 4B rocket motor with a gimballed nozzle and with a capability to reach 700 km altitude with a 600 kg payload. This rocket was guided by an inertial navigation system. MAXUS was developed for the European Space Agency by in a joint venture consortium between SSC and the German company Daimler-Benz Aerospace (DASA). The most recent MAXUS was launched successfully from Esrange in April 2001. The next launch is planned for November 2002.
- Ground support systems for space vehicles (EGSE and control centres). SSC designed and developed the control centres for the TELE-X, Viking, Freja, Astrid and Odin satellites.

Details about all these products and services can be easily accessed at our site on the World Wide Web: http://www.ssc.se/ssd

Colour pictures of the products of the Science Systems Division are included on the pages marked ”SSC Space System Products”. These pages show a summary of the division’s products, the small satellite projects of SSC, the satellites currently in development and the configuration of the Odin and the SMART-1 satellites and their main components.

6.3.3.3 Alcatel Space Industries, Toulouse, France (Alcatel)

ALCATEL SPACE is a world leader in the field of space systems and equipment covering the Telecommunications, Navigation and Observation domains. With over 35 years' experience in the space business, ALCATEL SPACE has ultimate responsibilities at all levels for 350 satellite systems: complete communication systems, space segments, satellites, earth stations, payloads and major subsystems and equipment, on-board as well as ground hardware and software.
The workforce of ALCATEL SPACE is of around 6,000 people and is located in 4 company plants in France (Toulouse, Valence, Cannes, Nanterre centres constituting Alcatel Space Industries) and in a number of domestic and Europe-based subsidiaries (France, Belgium, Germany, Norway, Denmark, Switzerland and Spain).

Today, the ALCATEL SPACE Division is composed of two parts:

- ALCATEL SPACE INDUSTRIES (ASPI), result of the merger between ALCATEL ESPACE, AEROSPATIALE Satellites, THOMSON CSF Services & Ground Space Systems (T4S), Sextant Avionique Space Division, CEGELEC telemetry activities on launch PAD in French Guyana.
- ALCATEL SPACECOM (SPACECOM)

And in addition, 7 European companies are 100% subsidiaries.

Company	Country
ALCATEL ETCA Space Activities	Belgium
ALCATEL Bell Space Activities	Belgium
ALCATEL Espacio	Spain
A.M.E Space	Norway
C:I:R	Switzerland
T:R:D Darmstadt	Germany
Testlog B:V.	Netherlands

ALCATEL SPACE INDUSTRIES is an end-to-end system contractor that supplies satellite payloads, equipment and complete satellite systems to both government agencies and commercial operators.

ALCATEL SPACECOM: through ALCATEL SPACE Operations, has developed an activity as an investor in satellite consortiums and as a system promoter for a number of projects.

Alcatel Relevant Experience

System Expertise
Alcatel has contributed to subsystems for more than 180 satellites and has been Prime Contractor for 60 of them during the past 30 years. In the framework of subsystems, Alcatel has provided avionics subsystems and software, structures, mechanisms, Solar Arrays, inertial wheels, harness, RF and optical payloads.

Alcatel is developing a full line of small satellites for Earth observation, astronomy and telecommunication use. The generic PROTEUS family will first comprise the JASON spacecraft which is the TOPEX-POSEIDON follow-on and will be followed by the astronomical COROT satellite. This mini-satellite family is also considered for the SPOT follow-on pro-

gram by CNES. Within this PROTEUS program, Alcatel has developed an extensive and concrete experience in the fast development of a high performance small satellite for Earth observation. JASON has been launched successfully launched this winter.

Moreover, Alcatel has also the experience of using platforms developed by other industries in order to fulfil the mission requirements. For example, in the case of the ESAT constellation, Space worked together with Surrey Satellite Technology Ltd in order to use a SSTL platform as a baseline for the mission.
All the experiences mentioned above, together with the GLOBALSTAR experience of Alcatel, cover all the areas of platform design and development with all ESA with a solid background.

Mission analysis
ALCATEL SPACE has acquired a unique experience in Mission Analysis through the studies of numerous positioning and station-keeping phases for all types of satellites on all types of orbits, from interplanetary orbits to Low-Earth orbits, not speaking of the geostationary orbit. The Mission Performance and Constellation Group is involved in numerous Mission Analysis studies for ESA among which one can cite:

- The pre-A phases of the Earth Explorer Opportunity missions (Wats, Wales, Acechem, EarthCare). On Wats, the Mission Performance and Constellation Group proposed an innovative design (anti-rotating satellites concept) for the constellation and therefore making the concept feasible with the proposed narrow field of view instrument.the needed software and hardware tools, and will provide

- The Mission Performance and Constellation Group was also deeply involved in the mission analysis studies of numerous satellite constellations .Among the most famous one can cite
  - The SkyBridge broad-band constellation made of 80 satellites.
  - The Galileo 27+3 satellite constellation

All the mission analysis studies were performed or followed by the Mission Performance and Constellation Group. The experience gained on that project is capitalised in Space Mechanics Tool, an innovative tool to be used for Mission Analysis on Low-Earth Orbits.

Avionics
As prime contractor for all spacecraft classes (Geo-telecommunication, Scientific, observation) ALCATEL Space has developed a large avionics industrial capability ranging from equipment level (Central Computing unit, autonomous GPS receiver, magnetic bearing reaction wheels) to validation of a complete avionics system.

Since 1995, Alcatel Space strategy was to develop a state of the art independent avionics products covering the different range of space applications. In-house foundings were and are being used not only in development but also in technology and tools improvement. These development products are based on centralised architecture adapted to the different needs of the applications.

The first achievement of this strategy is the **PROTEUS** generic scientific **LEO-avionics**, which validation is close to completion, for a launch in early 2001.

Early 2000, motivated by a design to cost approach, Alcatel Space has started the development of the generic LEO-MEO avionics to provide a common avionics core to different new

programs: GALILEO constellation, PROTEUS avionics upgrade, SKYBRIDGE, Mars Sample Return and the PLEÏADES Central Computer, but also possibly ACE +.

Instrument and RF navigation experience
During the last years, significant contracts were awarded to ALCATEL in the frame of the GNSS and Navigation System activities:

- By signing with the European Space Agency (ESA) a contract for the prime contractorship of the EGNOS system, to improve the performance of the GPS and GLONASS systems, ALCATEL SPACE confirmed its position as the European leader of satellite navigation systems. The manufacture of the aeronautical payload and the ground network of the MTSAT Japanese satellite programme has already provided an opportunity to demonstrate its expertise in this field.
- An even more stimulating challenge awaiting ALCATEL SPACE is that of the GALILEO project, a 24-satellite constellation system. In 2000 ALCATEL SPACE led a consortium of 61 companies to define a suitable system architecture thereby assisting the European Commission in initiating production of this system by the end of 2000.
- MTSAT, the Japanese Multifunctional Transport Satellite program.

At equipment level, the On-board division of Alcatel Space Industries in Valence (formerly Space Division of Sextant Avionics) has been engaged in the study and development of spaceborne radio-navigation receivers for more than 10 years. This activity began in1989 in close synergy with the European leadership of Sextant Avionics in airborne radio-navigation equipment.

Two main objectives were carried out in the field of activity relevant to spaceborne GPS/GNSS receivers, providing growing-up milestones during the past 10 years :
- R/T studies and prototyping in the field of GPS applications,
- Development of radio-navigation flight equipment.
- <u>R/T studies and prototyping</u> covered the different techniques related to positioning and to attitude determination in space mission, and addressed GPS, GLONASS and augmentation signals.
- <u>Development of flight equipment</u> benefited from more than 20 years of expertise in space-qualified electronic development and production through the space division of Sextant Avionics. Activities relevant to spaceborne GPS receivers are :

Among the other studies of relevant background, one can cite also

- **Altimetre bande Ka (CNES contract) – 1999/2000:**

ALCATEL has the responsibility of the phase 0 and A of a single frequency altimeter in Ka band with increased PRF and bandwidth compared to POSEIDON 2. A system analysis of a dual-frequency radiometer to be embarked with this altimeter has also been conducted. Moreover, Alcatel is conducting breadboarding activities for CNES on SSPA 35 Ghz (including driver) and coherent chirp generator (pulse to pulse) for possible Doppler capabilities.

- **CRYOSAT phase A (ESA contract) – 2000:**

ALCATEL is responsible of the design of the altimeter SIRAL (SAR Interferometric Altimeter) embarked on the CRYOSAT platform.

Assembly, integration and verification
In this facilities section, we give an overview of the means available within, even when these means are not specifically planned for use for ACE+ mission.

Complete satellites, as far as complex scientific instruments , have to be qualified by "system tests"; likewise, the various subsystems will be submitted to qualification tests during the preliminary development phase. This progressive qualification process requires, from unit up to system level:

- system level engineering, including the establishment of a development and test plan, specification of Ground Support Equipment (GSE, namely: mechanical, RF, electrical) and control procedures
- a wide range of specialised facilities, plus simulation and measurements devices
- technical management to ensure GSE development

As an example, assembly and integration operations as well as system level vibration, acoustic noise and thermal vacuum tests could be for instance performed in M95 building in Cannes :

This 3400 m² total surface M95 AIT complex provides 92 m² Class 100 clean room, 33 m² Class 10 000 clean room, 2670 m² Class 100 000 surfaces and 620 m² Class 100 000 compact antenna test range.

Other important facilities are also available in Toulouse, where for instance Globalstar payload and the mini satellite Clementine and the ENVISAT ASAR have been integrated, as well as numerous telecommunication payloads.

Further details about all services and products can be easily obtained via the Alcatel website: http://www.alcatel.com.

6.3.3.4 Saab Ericsson Space AB, Göteborg, Sweden (SES)

Saab Ericsson Space (SE) has its head office in Gothenburg, Sweden, and has over 30 years of experience with space programs. The company has 650 employees. For 2000, the turn over was around 80 Million USD.
SE is owned to 60 % by Saab (airplanes, military aircraft, etc.) and to 40 % by Ericsson (telecom, mobile communication, military radar, microwave links, etc.). SE has a subsidiary, Austrian Aerospace, in Vienna, Austria and an office in Los Angeles.
A substantial knowledge has been achieved in specific system areas like synthetic aperture radar (SAR), GPS and signal related missions, scatterometer, RF sensing and tracking, advanced ASIC development, effective production methods, data handling systems and related computer issues. This work has also led to experience of cooperation and sub-contracting of parts of the work to other companies and there expertise.
SE develops and manufactures products for satellites, launchers and other space vehicles.

Computers for launchers and spacecraft
Examples are computers for Ariane 4 and 5 launchers, central computer units for SPOT, Helios and ERS. Data S/S for SAR, antenna pointing controllers for telecom and Earth observation programs, mass memory, instrument control units for various missions, a large number of ASIC designs including 32-bit RISC processor for space applications. Current activities include data S/S with functions such as Fourier transformation/ compression/ digital filtering/ formatting, computers for the European ATV space transportation program, interface computer for the US instruments on-board METOP, attitude control systems with very high accuracy, data processing, payload processor for the European navigation system, control computers for on-board processing for broadband communication satellites.

TTC and Data Handling systems (C&DH) for satellites
For most European built telecom satellites and for programs such as SOHO, Meteosat and a new generation of versatile spacecraft. The systems have high degree of redundancy and autonomy for CCSDS packet standards, including a number of ASICs, functions for antenna pointing, power and thruster control. Our RF sensing system can be employed for a very accurate pointing of the satellite and/or antennas.

Antennas for spacecraft and launchers
Reflector antennas have been produced at various frequency bands (S-X-Ku-Ka, up to 575 GHz). Other products are medium gain horn antennas, feed and direct radiating arrays for mobile communication in GEO and MEO programs (4000 antenna elements delivered), large slotted waveguide antennas for SAR and scatterometer programs, TTC antennas, antennas for launchers and space transportation programs.

Microwave electronics for satellites
More than 50 frequency converters were delivered in the Eutelsat II program, RF Subsystem to the Envisat radar, tracking receiver systems for Artemis and Astra 1K, 150 receivers and converters for mobile communication satellite systems and complete telemetry for SPOT4 Vegetation, BPSK modulators and demodulators on Ka- and C-band for Artemis, GPSOS instrument (atmospheric sounding based on measurement of GPS signals) for the US NPOESS and GRAS for the European Metop programs. Frequency converters (UHF-, L-, S-, C-, Ku-, Ka-band) for many programs and now with modular building blocks for fast deliveries. Among current programs are Intelsat and DTH satellites.

Guidance and separation systems for sounding rockets and satellites
SE has developed a complete family of guidance systems for both atmospheric and exo-atmospheric guidance of sounding rockets and small launchers. Customers both in US and Europe. SE is supplying separation/adapter systems for Ariane 4, Ariane 5, Proton, Atlas, Sea Launch and other US launchers.

Systems and technology
Small advanced satellite AIT, co-prime for telecommunication satellite. System work as: radar applications, mobile communication via satellites, inter-satellite links, digital radio broadcasting, and navigation. Technologies for the above product areas like new antenna materials and concepts have been developed, ASICs for data handling and data compression, MMICs for frequency converters, and fiber optic components. Our production facilities are modern with automatic soldering capabilities, pick- and place machines, and automated test equipment for effectiveness and high quality.

The following are specifically related to the ACE+ program.

Instruments based on atmospheric/ionospheric sounding by utilising satellite-generated signals
This rather new field for satellites has been carried out in smaller experimental satellite programs and has been selected for the Metop program as an operational instrument. Saab Ericsson Space has done early studies on the system and is now engaged in the flight phase in both Europe and USA.
A major emphasis has been put to establish a system group that can understand and interpret the requirements on top level down to specification on the units in the system. The following major programs are on-going.

GRAS
Saab Ericsson Space was selected 1996 as the prime contractor for the study, "Development of a GNSS Receiver for Atmospheric Sounding". The work performed in the course of this study has been:

- Mission analysis, with Metop-1 as reference
- The definition of a complete set of instrument specifications for the Metop1 case
- Detailed operational concept of the instrument
- A defined architecture, optimised for atmospheric sounding measurements, and detailed specifications of each instrument subsystem, including the main instrument interface requirements with reference to Metop1
- Interface and accommodation requirements
- Detailed design of all subsystems
- Preliminary Software Requirements Document SRD
- Detailed circuit layout of an elegant breadboard, definition of a verification concept, and the preparation for breadboard manufacturing

Saab Ericsson Space is presently under contract to develop, qualify and deliver flight models of the GRAS occultation instruments. It includes advanced array antennas, frequency converters and digital electronics with on-board processing. One of the array antennas and the digital electronics unit can be seen on the pictures below. A picture of the Channel Processor Board in digital electronics unit is shown in the company description for Austrian Aerospace (AAE).

GPSOS
SE was selected by IPO (Integrated Programme Office) as the single contractor to carry out the "Risk Reduction Phase" of the GPS occultation sensor (GPSOS) in the US NPOESS programme. GPSOS is the American version of the GRAS instrument. It has however an important difference in the priority of performance requirements with respect to the GRAS instrument. The primary objective of GPSOS is to measure electron density and total electron content (TEC) in the ionosphere.
The responsibility of SE team is not limited to the on-board instrument, but the full definition of instrument and scientific algorithms. As such SE and its subcontractors AAE, DMI and Terma have established thorough user requirements and implications on instrument and ground segment, both for ionospheric and tropospheric measurements.

The GPSOS contract and the performed work has given Saab Ericsson Space a well renowned position with the US agencies NASA, NOAA and the US Air Force. Consequently, SE has been selected to continue with a full flight program.

GRAS+ and CALL
The GRAS+ (enhanced GRAS) instrument concept was developed as part of ACE (Atmosphere Climate Experiment) industry studies. The ACE mission, the predecessor of ACE+, was selected as "hot standby" mission following the previous Call for Earth Explorer Opportunity Missions. The ACE+ GNSS-LEO instrument GRAS+ will directly built on the ACE GRAS+ heritage.

The CALL (Cross-link Atmospheric LEO-LEO) instrument concept was developed during pre-phase A studies for the WATS (WAter vapour and temperature in the Troposphere and Stratosphere) mission, a recent candidate Earth Explorer Core Mission. The ESA "Report for Assessment" on WATS [ESA Special Publ. SP-1257(3), ESA Publ. Division, ESTEC, Noordwijk, 2001] provides an overview on the CALL concept. The ACE+ LEO-LEO instrument CALL (Cross-Atmosphere LEO-LEO Sounder) will directly built on the WATS CALL heritage.

A detailed description of the company and further details on products, services and space projects of Saab Ericsson Space can be obtained from the web site: http://www.space.se.

6.3.3.5 Fokker Space B.V., Leiden, Netherlands (Fokker)

1. Introduction

Fokker Space B.V. is the largest company in the Dutch Space industry. The Leiden-based company has about 360 personnel. Its main activities include among others solar arrays, launcher and satellite structures, thermal products, payload instruments and simulators. In addition, Fokker Space also plays a key role in the development of robotics. As prime contractor, Fokker Space is responsible for the European Robotic Arm (ERA) which will help to build, service and operate the Russian segment of the International Space Station.

Fokker Space B.V., originally a member of the Fokker Aircraft group, is a private limited company under Dutch law and operates as a fully independent company since 1995. Fokker Space is well embedded in the Dutch aerospace infrastructure due to close relations with the Dutch Space Agency (NIVR), the National Aerospace Laboratory (NLR), the Delft University of Technology and other Dutch aerospace industries and institutes. Fokker Space has entered into strategic partnerships in Europe, Russia and North America.

The company is organised in three main divisions, each specialised in the design, development and manufacturing of specific products:

- Solar Arrays: solar arrays and related mechanisms
- Structures & Mechanical Systems: launcher, re-entry vehicle and satellite structures
- Advanced Systems & Engineering: attitude and orbit control systems, thermal control systems, science payloads, simulators and robotics

Of particular interest for the ACE+ mission are the following activities of Fokker Space.

2. Satellite configuration and structures

- Fokker Space is responsible for the systems engineering and structural sub-system of the small free-flying satellite SLOSHSAT, to be deployed by a Space Shuttle HitchHiker for the purpose of fluid dynamics studies in low gravity.
- Fokker Space is responsible for the development and manufacturing of secondary structures for the family of Meteosat Second Generation satellites.
- Fokker Space and SAAB-Ericsson Space have co-operated in a study on a small satellite (ConeXpress) for demonstration of communication payloads in GTO or Molniya type orbits. This satellite has been used as baseline for a proposal to ESA for the GEODEM study.

3. Solar arrays and power systems

- Fokker Space has realised a large number of solar arrays for several satellites, ranging from 1 to 10 kW power generation, all of them being successfully placed in orbit. The ARA-Mk3 family of solar arrays has been initiated by Fokker Space based on specific customer requirements from the industry and from ESTEC for future telecom satellites. Its goal was to develop a family of solar arrays which covers a wide range of power needs (4-8kW) at an attractive performance target (W/kg) and an acceptable price level. Specifically, the attention was given to obtain maximum design modularity and flexibility, combined with low cost. Fokker Space has developed the solar arrays of more than 60 S/C. Some recent projects are among others:
    - Earth observation and scientific S/C: Rosetta, SMART-1, METOP 1-3, EOS-Chemistry, Integral, Envisat, XMM, Artemis, Chandra, SAX, SOHO
    - Telecomm. satellites: Quickbird-2, Intelsat KTV, Astra-2B, Nilesat, Hotbird 2-5

    - Specials: ATV
- Fokker Space is responsible for the complete power sub-system of SLOSHSAT, from power generation to power distribution to the payload and bus.

4. Hold-down and release mechanisms (HDRM)

Fokker Space has a large experience with hold-down and release mechanisms for solar arrays, antennas and shutters. They make use of a patented system developed by Fokker Space and based on the cutting of restraining cables (Kevlar or Aramid) by thermal knives. Some of the most recently developed and qualified applications are:

- Multi-purpose Hold-down and Release Mechanism developed under ESA GSTP2 programme for general application such as antenna, boom and panel hold-down and release
- SCIAMACHY radiant cooler release mechanism
- Envisat HDRM to restrain 5 ASAR antenna panels and the S/C solar arrays
- ARA Mk2 and Mk3 HDRM to restrain 2 to 7 solar panels of the Fokker Space Advanced Rigid Array (ARA) Mk2 or 3 types
- Skynet 4 antennas hold-down
- SOHO HDRM to restrain and tension the Antenna Pointing Mechanism
- SAX concentrator shutter mechanism

5. Thermal control systems (TCS)

Fokker Space has proven capabilities in the field of thermal control, in particular for scientific instruments. The most recent projects in which complete thermal control systems (including blankets, shutters, heat pipe radiators and passive coolers) have been developed are:

- SCIAMACHY: as joint-prime contractor for the SCIAMACHY project, Fokker Space has also developed the TCS of this advanced next generation atmospheric research instrument to be used on Envisat. In addition to the engineering activities, Fokker Space is also in charge of the integration and test programmes for the thermal, mechanical and optical systems.
- OMI-EOS programme: Fokker Space has prime-level responsibility of the OMI industrial team and has developed the TCS of this nadir viewing imaging spectrograph meant for ozone monitoring.
- MIPAS-FPS: Fokker Space was responsible for the design and development of the Focal Plane Sub-system of the MIPAS interferometer to be used on Envisat. This also includes the TCS and cryostat hardware (e.g. GFRP struts and thermal shield).
- ERA: Fokker Space is the Prime Contractor for the development of the European Robotic Arm (ERA), which is currently in the hardware and verification phase. Fokker Space is among others responsible for the TCS of ERA.

6. Control systems and AOCS

- Fokker Space has developed the European Robotic Arm ERA, an intelligent space robot designed for assembly and servicing of the Russian segment of the International Space Station Alpha. The ERA system will have an operational lifetime of ten years in orbit. The ERA system is composed of the following elements:
    - a 7-DOF relocatable manipulator
    - a man-machine interface for cosmonauts in Extra-Vehicular Activity which allows manual and automatic motion control (EVA-MMI)
    - a man-machine interface (laptop computer) which allows manual and automatic motion control by cosmonauts from inside the pressurised modules (IVA-MMI)
    - a set of base points spread over the Russian Segment of the space station

- a Mission Preparation and Training Equipment (MPTE), a set of computers and software designed for ERA mission preparation, mission training, supervisory mission control and mission evaluation
- Fokker Space designed, produced and tested the Attitude & Orbit Control Systems for the ISO (infra-red measurement) and SAX (X-ray measurement) satellites. The developed AOCS were able to meet the very severe pointing accuracy and station stability required by these scientific missions.
- Fokker Space has developed a range of Magnetic Torquers (8 to 700 Am^2) for use in AOCS where direct momentum control, magnetic disturbance compensation or momentum unloading from reaction wheels are required. These torquers are applicable on three-axis stabilised satellites in Low Earth Orbit and have been supplied to a number of spacecraft.

7. AIT facilities

In addition to the above expertise, Fokker Space has also a vast experience in Assembly, Integration and Test of satellite systems. The facilities include:

- clean rooms from nominal class 100.000 to ultra-clean class 100
- a 90 kN shaker for vibration and shock tests, to be combined with a climatic chamber
- an ambient pressure thermal cycling chamber (volume 5x1x2.5 m^3, temperature range -180 to +200 °C)
- a thermal-vacuum chamber (volume 0.8x0.8x1 m^3, temperature range –180 to +120 °C)
- a small thermal cycling facility (volume 0.5x0.5x2 m^3, temperature range –200 to +200 °C)
- a Very Large Area Solar Simulation (VLASS) for measurement of the electric output of solar cells (current-voltage characteristics, capacitance measurement under load). The "long-pulse" measuring system makes use of the light of an argon plasma arc
- various mechanical (modal testing, tensile bench), optical (laser interferometers, theodolites) and electrical (conducted EMC, ESD) facilities

Details on the products and services of Fokker Space can be obtained from the web site: http://www.fokkerspace.nl.

6.3.3.6 Patria Finavitec, Tampere, Finland (Patria)

Introduction

Patria is a Finnish Aerospace and Defense Group actively participating in the development of new technologies. Developing software and electronic products as well as acting as a system integrator are among Patria's core business areas. Patria also delivers total solutions for defense systems as well as niche solutions in wireless telecommunications and space electronics. Patria's net sales are 208.5 million euros (2000) and the number of employees approximately 2200.

In the field of Space Electronics Patria designs, manufactures and verifies space equipment. The company is specialized in the following type of equipment:

- Power control and distribution systems (PCDU, PDU)
- Command and data handling systems for small satellites (CDH)
- Dedicated electronic units such as Camera Controllers and Thermal Control units (see references below)
- Standard Space Debris Measuring instrument (DEBIE)

The company profile includes all the necessary capabilities as well as internal development programs for electronic equipment production:

- System definition
- Harware and software architectural design
- Electronic and SW design
- Parts procurement, mechanical parts design, printed circuit design etc.
- Assembly and programming.
- Verfication and environmental testing (vibration, thermal vacuum, EMC)
- Post delivery support

All the above mentioned activities will be performed according to Patria's design and documentation and under Patria's management and PA supervision.

Space Experience with special relevance to the proposed ACE-mission

- CryoSat PDU modules for the satellite's integrated PCDU for Astrium GmbH.
  PDU-modules are designed and manufactured in a development rapid cycle for ESA's EO Opportunity radar mission CryoSat. These modules are integrated to the Astrium's PCDU.
- Phase B of the Roemer Command and Data Handling unit (CDH).
  The preliminary design and interfaces for a 100 MIPS space computer has been performed for the Danish Roemer small satellite mission. The CDH equipment controls the satellite as well as performs the image processing of the Roemer satellite redundant Star Sensors.
- OMI Electronics Unit (ELU) for NASA's EOS-Aura mission (delivered 8/01)
  Ozone Monitoring Instrument (OMI) is an imaging nadir-viewing spectrometer intended for global ozone mapping on EOS-Aura. The Electronics Units (ELU) controls the instrument's two CCDs and several calibration lights source control, calibration mechanism drives and associated power conversion and conditioning functions.

- DEBIE Standard Space Debris Measuring instrument, the first instrument (DEBIE-1) flying on ESA's PROBA demonstration satellite

  DEBIE is intended for in Orbit measurements of small meteoroids, space debris. The instrument uses up to four Sensor Units for the particle detection and characterization of the detected particles. The detection and analysis is based on plasma charge measurement and impact measurement for the calculation of individual particle mass and velocity.

Other Finavitec´s main ESA or bilateral projects and customers during the past few years are:

Major Flight units:
- Rosetta PDUs (2 units) for the ESA's cometary mission (delivered 6/01)
- Mars Express PDU for Astrium Ltd. (delivered 5/01)
- Station computer system for Mars ´96 Small Surface Stations for the Finnish Meteorological Institute (delivered 95 for Russian Mars-96 mission)
- GOME-instrument PDU-series (3 identical units) for Laben to Eumetsat METOP1,2 and 3 –satellites (two units delivered by the end of 2001)
- XMM Mirror Thermal Control Unit (MTCU) for Dornier GmbH (delivered 2/98)
- Envisat-1 GOMOS-Instrument Science Data Electronics Unit (SDE) for MMS-F (delivered 5/97)

Small Flight units:
- Power supplies for Swedish Freja Mission for the Swedish Space Corporation
- Digital Electronics for SOHO ERNE-instrument for the Finnish Meteorological Institute
- LVPC Power Supply for SOHO CEPAC-instrument for the Finnish Meteorological Institute
- Digital Electronics for SOHO SWAN-instrument for the Finnish Meteorological Institute

EGSE´s:
- METOP NIU EGSE for Saab Ericsson Space
- Four GOMOS Instrument EGSEs for the MMS-F
- Three Instrument EGSEs of the SEVIRI instrument of MSG-1 for the MMS-F
- Unit testers for Rosetta PDUs, OMI ELU, XMM MTCU, GOMOS SDE and MARS 96 for internal use

Facilities

Finavitec has a cleanroom facility for space equipment assembly and integration purposes. The cleanroom is divided in two areas: a small room is used mainly for soldering and assembly activities, a bigger room for integration and testing purposes. Total area of the cleanroom is about 210 m2.

The cleanroom has been equipped with needed tools and equipment including:
- a laminar flow cabinet (class 100)
- thermal chambers
- test and inspection equipment
- ESD protection

Finavitec has an ESA approved surface mount manufacturing capability, which covers well all most common component types enabling effective packaging of electronics. This manufacturing line has been used e.g. in Rosetta, MarsExpress and OMI projects mentioned above.

In addition, Finavitec has a development laboratory equipped with modern test equipment including a facility for some basic EMC-measurements. External facilities are used for full qualification of space equipment.

Finavitec has a well proven co-operation with the Technical Research Center of Finland (VTT) and their services have been successfully used in most of the projects and programmes described above. ESA/ESTEC facilities have also been used for EMC testing.

Details on the products and services of Patria Finavitec can be obtained from the web site: http://www.patria.fi.

6.3.3.7 Austrian Aerospace GmbH, Vienna, Austria (AAE)

Austrian Aerospace (AAE) has been founded in 1997, merging the two companies Schrack Aerospace and ORS (Österreichische Raumfahrt und Systemtechnik GmbH) which had been active in the space field since many years. AAE is involved in on-board electronics, on-board mechanics and thermal hardware for satellites as well as in electrical and mechanical ground support equipment.
AAE is the leading Austrian company in the field of electronics for space and related ground applications. The company disposes of profound experience in the development and manufacturing of flight hardware and software as well as electrical ground support equipment, and in the past years AAE has concentrated on the application of the DSP know-how.

AAE has already finalized or is in the process of carrying out a number of contracts that rely on the ESA standard DSP processor TSC21020F as core processing element. Examples are an **Electronics Unit** with its associated software **for a Wide-field Star Sensor**, which is compatible with an already existing Wide Field Star Sensor Optical Head, and the **Terminal Controller** of an **Optical Inter-satellite Link Terminal**. A special challenge is the application within an advanced **on-board Telecom Payload Processor**, where a high level of processing power is required in a small volume.

Digital signal processing plays nowadays a paramount role in any instrument for Earth observation or scientific missions. AAE has been extremely successful in the ESA **METOP** programme, where we provide 3 out of 4 programmable on-board DSP-systems for the following instruments:

- Infrared Atmospheric Sounding Interferometer (**IASI**)
- GNSS Receiver for Atmospheric Sounding (**GRAS**)
- NOAA Instruments Interface Unit (**NIU**)

For the Integrated Program Office IPO, a consortium formed by NASA, the U.S. DOD, and NOAA, AAE participates in the development of the Global Positioning Satellite Occultation Sensor (**GPSOS**) for the NPOESS satellite.

In all contracts AAE is focusing both on the DSP hardware and software part and plays a vital role with respect to the systems engineering of digital receivers and space-borne scientific measurement systems. In this context sensor-data acquisition and optimised data-reduction techniques are of paramount importance.

AAE's signal processing know-how provided significant contributions to the preparatory studies for **GALILEO**, the new European navigation system. We participated in the **Signal Design Study** and are involved in the development of the critical **Navigation Signal Generator** of the future space segment of GALILEO.

Further, we contribute to the standardization and development process of **Spacewire**, the envisaged new European data link. We improved and verified the protocol by simulations and currently specify the router functionality, which will be implemented in an ASIC in the next steps.

Of particular interest for the present project is the heritage of AAE in GPS / GNSS Technology and Applications:

AAE has gained experience on the GPS/GNSS receiver side as well as on the signal generation side. This leads to a thorough understanding of the whole system and enhances strongly the system engineering aspects.

AAE experience in **GNSS receiver technology:**
The most prominent projects in this area are the participation to the development of the European **GNSS Receiver for Atmospheric Sounding (GRAS)** on the METOP satellites and the U.S. **GPS Occultation Sensor (GPSOS)** on the NPOESS satellites. In both programmes, carried out together with Saab Ericsson Space, AAE is responsible for the digital signal-processing unit, implementing a multi-channel GPS/GLONASS receiver. Besides, AAE is responsible for the Instrument Test Equipment. Also to be mentioned is the AAE contribution to the preparatory **ACE study**. (The ACE mission, the predecessor of ACE+, was selected as "hot standby" mission following the previous Call for Earth Explorer Opportunity Missions.)

AAE has acquired further experience in the field of GNSS signal reception within the following projects:

- Advanced GPS/GLONASS ASIC (AGGA) Simulations
- AGGA Validation
- GRAS Phase B study including the "Sensor Breadboard" activity
- GalileoSat system support work
- GNSS-OPPSCAT – Utilisation of Scatterometry using Sources of Opportunity
- Application of the PARIS concept (Passive Reflectometry and Interferometric System) to transoceanic aircraft remote sensing
- Delay Doppler mapping ASIC

In the field of **GNSS signal design and signal generation** AAE has acquired experience within the following projects:

- Navigation Signal Generator (Advanced Navigation Payload Processor PPU)
- GNSS 2 – Signal Design Study
- GALILEOSAT Navigation Payload PN-Code Generator, Phase B Study
- Pre-Development of an On-board Navigation Signal Generator for GalileoSat

Details on the products and services of Austrian Aerospace GmbH can be obtained from the web site: http://www.space.at.

6.3.3.8 APCO Technologies SA, Vevey, Switzerland (APCO)

APCO Technologies SA is a fully independent Swiss company and has contributed to major ESA programmes such as ATV, ISS Nodes, XMM, ROSETTA, INTEGRAL, ARIANE with the development of flight hardware and Mechanical Ground Support Equipment (MGSE), as well as database development.

APCO Technologies SA is currently responsible for the engineering, analysis and manufacture of the complete flight structure of the ESA SMART-1 Spacecraft, under the responsibility of Swedish Space Corporation (SSC). We have now delivered successfully the SMART-1 FM and are now looking to participate to similar projects.

Through SMART-1, we have gained extensive and recognised experience, such as:

- Structural analysis : static and dynamic FEMs, modal analysis of the fully equipped Spacecraft (PATRAN/NASTRAN).

- Thermal analysis : extensive thermo-elastic analysis of the fully equipped Spacecraft (PATRAN/NASTRAN).

- Mechanical design : design of low mass budget structures with high strength-to-weight ratio. Improved access to equipment units during integration is also an important design consideration.

- Manufacture and test : design, manufacture, and test of tailor-made aluminium honeycomb sandwich panels, struts and secondary structures. An innovative manufacturing method was developed, allowing a one shot autoclave run of the complete panel (including profiles, inserts, heat pipes,…). This method resulted in a decrease in weight relatively to conventional honeycomb sandwich panels.

We believe that the SMART-1 structure demonstrates technical innovations that could advantageously be applied to develop the ACE+ structure and that particular effort should be put in order to take into account the design heritage of the SMART-1 structure.

On overview on APCO Technologies SA and details on how to contact us can be obtained via the web site: http://www.grpm.ch/companies/apco.htm. We will be glad to supply a description of some of our main realisations regarding the design and manufacture of flight hardware and flight structure, as well as our company brochure.

6.4 Letters of Support

In this section formal support letters received for the ACE+ mission are summarized. Except for the ESA/EUMETSAT GRAS-SAG expression of support, which is contained below, all letters have been sent under separate cover to ESTEC (by DMI and IGAM/UG).
While time constraints did not permit to collect a large number of formal letters of support, the informal feedbacks we got from within many further leading entities (e.g., World Climate Research Programme, European Commission/Environmental Research) ensure that a series of further formal endorsements by leading authorities could be obtained if desired.

6.4.1 Brief Summaries on Letters of Support

6.4.1.1 World Meteorological Organization (WMO)

The WMO letter has been sent to ESTEC under separate cover by DMI. The WMO expressed its strong support already for the ACE mission proposed 1998 and confirmed its view of considering radio occultation measurements of key importance for atmosphere and climate.

6.4.1.2 Stratospheric Processes and their Role in Climate (SPARC)

The SPARC letter has been sent to ESTEC under separate cover by DMI. The SPARC Committee expressed its strong support already for the ACE mission proposed 1998 and re-confirmed it for ACE+.

6.4.1.3 ESA/EUMETSAT GRAS-SAG (12th Meeting, Nov 28–29, 2001)

The GRAS-SAG discussed the ACE+ proposal at its Twefth Meeting in November 2001 and – as summarized in the Minutes of Meeting – noted that this would be scientifically a very interesting mission, which the group would find highly worthwhile to realize. That it would exploit both GNSS-LEO and LEO-LEO radio occultations, the latter with no ambiguities on temperature and water vapour in the troposphere, was noted to be particularly valuable.

6.4.1.4 Inst. of Atmospheric Physics, Univ. of Arizona (IAP/UA) USA

The IAP/UA letter has been sent to ESTEC under separate cover by IGAM/UG. In summary, IAP/UA considers ACE+ an unique and key atmosphere and climate mission for the future. IAP/UA even offers to contribute, based on NASA funds, add-on LEO-LEO instrumentation for extending the mission scope even further (183 GHz stratospheric water vapor capability and optionally also 195 GHz ozone capability).

6.4.1.5 Communications Research Laboratory (CRL), Japan

The CRL letter has been sent to ESTEC under separate cover by IGAM/UG. In summary, the President of CRL, a world-renowed Japanese center of excellence in radio science, sees the ACE+ mission a mission of pivotal importance for fundamentally advancing radio occultation (by demonstrating the novel LEO-LEO concept) and for aiding weather prediction and atmosphere/climate sciences worldwide.

6.4.1.6 Institute of Communications and Navigation/DLR, Germany

The DLR letter has been sent to ESTEC under separate cover by IGAM/UG. The Director of the Inst. of Communications and Navigation of DLR especially stressed the enormous importance the ACE+ mission would have for ionosphere and space weather applications. He emphasises that his Institute would be fully prepared to contribute in a leading way to the exploitation of this great spin-off capability.